Ngspice Users Manual
Version 24

January 27, 2012

Locations

The project and download pages of ngspice may be found at

Ngspice home page http://ngspice.sourceforge.net/

Project page at sourceforge http://sourceforge.net/projects/ngspice/

Download page at sourceforge http://sourceforge.net/projects/ngspice/files/

CVS source download http://sourceforge.net/scm/?type=cvs&group_id=38962

Status

This manual is a work in progress. Some to-dos are listed in the following. More is surely needed. You are invited to report bugs, missing items, wrongly described items, bad English style etc.

To Do

1. Review of chapt. 1.3
2. hfet1,2, jfet2 model descriptions
3. tclspice compilation chapt. 19.6

How to use this manual

The manual is a "work in progress". It may accompany a specific ngspice release, e.g. ngspice-24 as manual version 24. If its name contains "Version xxplus", it describes the actual code status, found at the date of issue in the concurrent version system (CVS). The manual is intended to provide a complete description of the ngspice functionality, its features, commands, or procedures. It is not a book about learning spice usage, but the novice user may find some hints how to start using ngspice. Chapter 20.1 gives a short introduction how to set up and simulate a small circuit. Chapter 31 is about compiling and installing ngspice from a tarball or the actual CVS source code, which you may find on the ngspice web pages. If you are running a specific LINUX distribution, you may check if it provides ngspice as part of the package. Some are listed here.

Part I

Ngspice User Manual

Contents

I Ngspice User Manual **5**

1 Introduction **33**

1.1 Simulation Algorithms 34

1.1.1 Analog Simulation 34

1.1.2 Digital Simulation 35

1.1.3 Mixed-Mode Simulation 35

1.1.4 Mixed-Level Simulation 36

1.2 Supported Analyses 37

1.2.1 DC Analyses 37

1.2.2 AC Small-Signal Analysis 38

1.2.3 Transient Analysis 38

1.2.4 Pole-Zero Analysis 38

1.2.5 Small-Signal Distortion Analysis 39

1.2.6 Sensitivity Analysis 39

1.2.7 Noise Analysis 40

1.2.8 Periodic Steady State Analysis 40

1.3 Analysis at Different Temperatures 40

1.4 Convergence 42

1.4.1 Voltage convergence criterion 42

1.4.2 Current convergence criterion 42

1.4.3 Convergence failure 43

2 Circuit Description **45**

2.1 General Structure and Conventions 45

2.2 Basic lines 47

2.2.1 .TITLE line 47

2.2.2 .END Line 47

2.2.3 Comments . . . 48
2.2.4 End-of-line comments . . . 48
2.3 Device Models . . . 48
2.4 Subcircuits . . . 49
2.4.1 .SUBCKT Line . . . 50
2.4.2 .ENDS Line . . . 51
2.4.3 Subcircuit Calls . . . 51
2.5 .GLOBAL . . . 51
2.6 .INCLUDE . . . 51
2.7 .LIB . . . 52
2.8 .PARAM Parametric netlists . . . 52
2.8.1 .param line . . . 52
2.8.2 Brace expressions in circuit elements: . . . 53
2.8.3 Subcircuit parameters . . . 53
2.8.4 Symbol scope . . . 54
2.8.5 Syntax of expressions . . . 54
2.8.6 Reserved words . . . 57
2.8.7 Alternative syntax . . . 57
2.9 .func . . . 57
2.10 .csparam . . . 58
2.11 Parameters, functions, expressions, and command scripts . . . 58
2.11.1 Parameters . . . 58
2.11.2 Nonlinear sources . . . 59
2.11.3 Control commands, Command scripts . . . 59

3 Circuit Elements and Models 61
3.1 General options and information . . . 61
3.1.1 Simulating more devices in parallel . . . 61
3.1.2 Technology scaling . . . 62
3.1.3 Model binning . . . 62
3.1.4 Transistors and Diodes . . . 62
3.2 Elementary Devices . . . 63
3.2.1 Resistors . . . 63
3.2.2 Semiconductor Resistors . . . 64
3.2.3 Semiconductor Resistor Model (R) . . . 64

3.2.4 Resistors, dependent on expressions (behavioral resistor) 65
3.2.5 Capacitors 66
3.2.6 Semiconductor Capacitors 67
3.2.7 Semiconductor Capacitor Model (C) 67
3.2.8 Capacitors, dependent on expressions (behavioral capacitor) 68
3.2.9 Inductors 69
3.2.10 Inductor model 70
3.2.11 Coupled (Mutual) Inductors 71
3.2.12 Inductors, dependent on expressions (behavioral inductor) 71
3.2.13 Capacitor or inductor with initial conditions 72
3.2.14 Switches 73
3.2.15 Switch Model (SW/CSW) 74

4 Voltage and Current Sources 77

4.1 Independent Sources for Voltage or Current 77
4.1.1 Pulse 78
4.1.2 Sinusoidal 79
4.1.3 Exponential 79
4.1.4 Piece-Wise Linear 80
4.1.5 Single-Frequency FM 80
4.1.6 Amplitude modulated source (AM) 80
4.1.7 Transient noise source 81
4.1.8 Random voltage source 82
4.1.9 Arbitrary Phase Sources 82
4.2 Linear Dependent Sources 83
4.2.1 Linear Voltage-Controlled Current Sources (VCCS) 83
4.2.2 Linear Voltage-Controlled Voltage Sources (VCVS) 83
4.2.3 Linear Current-Controlled Current Sources (CCCS) 84
4.2.4 Linear Current-Controlled Voltage Sources (CCVS) 84
4.2.5 Polynomial Source Compatibility 84

5 Non-linear Dependent Sources (Behavioral Sources) 85

5.1 B source (ASRC) 85
5.1.1 Syntax and usage 85
5.1.2 par('expression') 88
5.1.3 Piecewise Linear Function: pwl 88

5.2 E source (non-linear voltage source)* 90
5.2.1 VOL 90
5.2.2 VALUE 90
5.2.3 TABLE 90
5.2.4 POLY 90
5.2.5 LAPLACE 91
5.3 G source (non-linear current source)* 92
5.3.1 CUR 92
5.3.2 VALUE 92
5.3.3 TABLE 92
5.3.4 POLY 93
5.3.5 LAPLACE 93
5.3.6 Example 93

6 Transmission Lines 95
6.1 Lossless Transmission Lines 95
6.2 Lossy Transmission Lines 96
6.2.1 Lossy Transmission Line Model (LTRA) 96
6.3 Uniform Distributed RC Lines 98
6.3.1 Uniform Distributed RC Model (URC) 98
6.4 KSPICE Lossy Transmission Lines 99
6.4.1 Single Lossy Transmission Line (TXL) 99
6.4.2 Coupled Multiconductor Line (CPL) 100

7 Diodes 101
7.1 Junction Diodes 101
7.2 Diode Model (D) 101
7.3 Diode Equations 103

8 BJTs 109
8.1 Bipolar Junction Transistors (BJTs) 109
8.2 BJT Models (NPN/PNP) 109

9 JFETs 115
9.1 Junction Field-Effect Transistors (JFETs) 115
9.2 JFET Models (NJF/PJF) 115
9.2.1 Model by Parker and Skellern 115
9.2.2 Modified Parker Skellern model 116

10 MESFETs **119**
10.1 MESFETs . . . 119
10.2 MESFET Models (NMF/PMF) . . . 119
10.2.1 Model by Statz e.a. . . . 119
10.2.2 Model by Ytterdal e.a. . . . 120
10.2.3 hfet1 . . . 120
10.2.4 hfet2 . . . 120

11 MOSFETs **121**
11.1 MOSFET devices . . . 121
11.2 MOSFET models (NMOS/PMOS) . . . 122
11.2.1 MOS Level 1 . . . 122
11.2.2 MOS Level 2 . . . 122
11.2.3 MOS Level 3 . . . 122
11.2.4 MOS Level 6 . . . 124
11.2.5 Notes on Level 1-6 models . . . 124
11.2.6 BSIM Models . . . 127
11.2.7 BSIM1 model (level 4) . . . 128
11.2.8 BSIM2 model (level 5) . . . 130
11.2.9 BSIM3 model (levels 8, 49) . . . 130
11.2.10 BSIM4 model (levels 14, 54) . . . 130
11.2.11 EKV model . . . 131
11.2.12 BSIMSOI models (levels 10, 58, 55, 56, 57) . . . 131
11.2.13 SOI3 model (level 60) . . . 132
11.2.14 HiSIM models of the University of Hiroshima . . . 132

12 Mixed-Mode and Behavioral Modeling with XSPICE **133**
12.1 Code Model Element & .MODEL Cards . . . 133
12.2 Analog Models . . . 137
12.2.1 Gain . . . 137
12.2.2 Summer . . . 138
12.2.3 Multiplier . . . 139
12.2.4 Divider . . . 140
12.2.5 Limiter . . . 142
12.2.6 Controlled Limiter . . . 143
12.2.7 PWL Controlled Source . . . 145

12.2.8 Filesource 147
12.2.9 multi_input_pwl block 149
12.2.10 Analog Switch 150
12.2.11 Zener Diode 151
12.2.12 Current Limiter 153
12.2.13 Hysteresis Block 155
12.2.14 Differentiator 157
12.2.15 Integrator 158
12.2.16 S-Domain Transfer Function 160
12.2.17 Slew Rate Block 162
12.2.18 Inductive Coupling 164
12.2.19 Magnetic Core 165
12.2.20 Controlled Sine Wave Oscillator 168
12.2.21 Controlled Triangle Wave Oscillator 169
12.2.22 Controlled Square Wave Oscillator 170
12.2.23 Controlled One-Shot 172
12.2.24 Capacitance Meter 174
12.2.25 Inductance Meter 175
12.3 Hybrid Models 175
12.3.1 Digital-to-Analog Node Bridge 176
12.3.2 Analog-to-Digital Node Bridge 177
12.3.3 Controlled Digital Oscillator 178
12.3.4 Node bridge from digital to real with enable 180
12.3.5 A Z**-1 block working on real data 180
12.3.6 A gain block for event-driven real data 181
12.3.7 Node bridge from real to analog voltage 181
12.4 Digital Models 182
12.4.1 Buffer 182
12.4.2 Inverter 183
12.4.3 And 184
12.4.4 Nand 185
12.4.5 Or 186
12.4.6 Nor 187
12.4.7 Xor 188
12.4.8 Xnor 189

12.4.9 Tristate . . . 190
12.4.10 Pullup . . . 192
12.4.11 Pulldown . . . 192
12.4.12 D Flip Flop . . . 193
12.4.13 JK Flip Flop . . . 195
12.4.14 Toggle Flip Flop . . . 197
12.4.15 Set-Reset Flip Flop . . . 199
12.4.16 D Latch . . . 202
12.4.17 Set-Reset Latch . . . 204
12.4.18 State Machine . . . 206
12.4.19 Frequency Divider . . . 209
12.4.20 RAM . . . 211
12.4.21 Digital Source . . . 213
12.5 Predefined Node Types . . . 215
12.5.1 Real Node Type . . . 215
12.5.2 Int Node Type . . . 215

13 Verilog A Device models 217
13.1 Introduction . . . 217
13.2 adms . . . 217
13.3 How to integrate a Verilog-A model into ngspice . . . 217
13.3.1 How to setup a *.va model for ngspice . . . 217
13.3.2 Adding admsXml to your build environment . . . 217

14 Mixed-Level Simulation (ngspice with TCAD) 219
14.1 Cider . . . 219
14.2 GSS, Genius . . . 220

15 Analyses and Output Control 221
15.1 Simulator Variables (.options) . . . 221
15.1.1 General Options . . . 222
15.1.2 DC Solution Options . . . 222
15.1.3 Transient Analysis Options . . . 223
15.1.4 MOSFET Specific options . . . 224
15.1.5 Transmission Lines Specific Options . . . 225
15.1.6 Precedence of option and .options commands . . . 225

15.2 Initial Conditions . . . 225
15.2.1 .NODESET: Specify Initial Node Voltage Guesses . . . 225
15.2.2 .IC: Set Initial Conditions . . . 225
15.3 Analyses . . . 226
15.3.1 .AC: Small-Signal AC Analysis . . . 226
15.3.2 .DC: DC Transfer Function . . . 227
15.3.3 .DISTO: Distortion Analysis . . . 227
15.3.4 .NOISE: Noise Analysis . . . 229
15.3.5 .OP: Operating Point Analysis . . . 229
15.3.6 .PZ: Pole-Zero Analysis . . . 230
15.3.7 .SENS: DC or Small-Signal AC Sensitivity Analysis . . . 230
15.3.8 .TF: Transfer Function Analysis . . . 231
15.3.9 .TRAN: Transient Analysis . . . 231
15.3.10 Transient noise analysis (at low frequency) . . . 231
15.3.11 .PSS: Periodic Steady State Analysis . . . 235
15.4 Measurements after Op, Ac, and Transient Analysis . . . 235
15.4.1 .meas(ure) . . . 235
15.4.2 batch versus interactive mode . . . 236
15.4.3 General remarks . . . 236
15.4.4 Input . . . 237
15.4.5 Trig Targ . . . 237
15.4.6 Find ... When . . . 238
15.4.7 AVG|MIN|MAX|PP|RMS|MIN_AT|MAX_AT . . . 240
15.4.8 Integ . . . 240
15.4.9 param . . . 240
15.4.10 par('expression') . . . 241
15.4.11 Deriv . . . 241
15.4.12 More examples . . . 241
15.5 Batch Output . . . 242
15.5.1 .SAVE: Name vector(s) to be saved in raw file . . . 242
15.5.2 .PRINT Lines . . . 243
15.5.3 .PLOT Lines . . . 244
15.5.4 .FOUR: Fourier Analysis of Transient Analysis Output . . . 244
15.5.5 .PROBE: Name vector(s) to be saved in raw file . . . 245
15.5.6 par('expression'): Algebraic expressions for output . . . 245
15.5.7 .width . . . 245

16 Starting ngspice **247**
16.1 Introduction . . . 247
16.2 Where to obtain ngspice . . . 247
16.3 Command line options for starting ngspice and ngnutmeg . . . 248
16.4 Starting options . . . 250
16.4.1 Batch mode . . . 250
16.4.2 Interactive mode . . . 250
16.4.3 Interactive mode with control file or control section . . . 250
16.5 Standard configuration file spinit . . . 251
16.6 User defined configuration file .spiceinit . . . 252
16.7 Environmental variables . . . 253
16.7.1 Ngspice specific variables . . . 253
16.7.2 Common environment variables . . . 253
16.8 Memory usage . . . 254
16.9 Simulation time . . . 254
16.10 Ngspice on multi-core processors using OpenMP . . . 254
16.10.1 Introduction . . . 254
16.10.2 Some results . . . 255
16.10.3 Usage . . . 256
16.10.4 Literature . . . 257
16.11 Server mode option -s . . . 257
16.12 Ngspice control via input, output fifos . . . 258
16.13 Compatibility . . . 260
16.13.1 Compatibility mode . . . 260
16.13.2 Missing functions . . . 260
16.13.3 Devices . . . 261
16.13.4 Controls and commands . . . 261
16.14 Reporting bugs and errors . . . 262

17 Interactive Interpreter **263**
17.1 Introduction . . . 263
17.2 Expressions, Functions, and Constants . . . 263
17.3 Plots . . . 267
17.4 Command Interpretation . . . 268
17.5 Commands . . . 268

17.5.1 Ac*: Perform an AC, small-signal frequency response analysis 269
17.5.2 Alias: Create an alias for a command 269
17.5.3 Alter*: Change a device or model parameter 270
17.5.4 Altermod*: Change model parameter(s) 270
17.5.5 Asciiplot: Plot values using old-style character plots 271
17.5.6 Aspice*: Asynchronous ngspice run 272
17.5.7 Bug: Mail a bug report 272
17.5.8 Cd: Change directory 272
17.5.9 Cdump: Dump the control flow to the screen 272
17.5.10 Codemodel*: Load an XSPICE code model library 273
17.5.11 Compose: Compose a vector 273
17.5.12 Dc*: Perform a DC-sweep analysis 274
17.5.13 Define: Define a function 274
17.5.14 Deftype: Define a new type for a vector or plot 274
17.5.15 Delete*: Remove a trace or breakpoint 274
17.5.16 Destroy: Delete an output data set 275
17.5.17 Devhelp: information on available devices 275
17.5.18 Diff: Compare vectors 275
17.5.19 Display: List known vectors and types 275
17.5.20 Echo: Print text 276
17.5.21 Edit*: Edit the current circuit 276
17.5.22 Eprint*: Print an event driven node (only used with XSPICE option) . . 276
17.5.23 FFT: fast Fourier transform of vectors 277
17.5.24 Fourier: Perform a Fourier transform 278
17.5.25 Gnuplot: Graphics output via Gnuplot 278
17.5.26 Hardcopy: Save a plot to a file for printing 279
17.5.27 Inventory: Print circuit inventory 279
17.5.28 Help: Print summaries of Ngspice commands 279
17.5.29 History: Review previous commands 279
17.5.30 Iplot*: Incremental plot 279
17.5.31 Jobs*: List active asynchronous ngspice runs 280
17.5.32 Let: Assign a value to a vector 280
17.5.33 Linearize*: Interpolate to a linear scale 280
17.5.34 Listing*: Print a listing of the current circuit 281
17.5.35 Load: Load rawfile data 281

17.5.36 Meas*: Mesurements on simulation data 281
17.5.37 Noise*: Noise analysis 282
17.5.38 Op*: Perform an operating point analysis 282
17.5.39 Option*: Set a ngspice option 282
17.5.40 Plot: Plot values on the display 283
17.5.41 Print: Print values 284
17.5.42 Quit: Leave Ngspice or Nutmeg 284
17.5.43 Rehash: Reset internal hash tables 285
17.5.44 Remcirc*: Remove the current circuit 285
17.5.45 Reset*: Reset an analysis 285
17.5.46 Reshape: Alter the dimensionality or dimensions of a vector 285
17.5.47 Resume*: Continue a simulation after a stop 286
17.5.48 Rspice*: Remote ngspice submission 286
17.5.49 Run*: Run analysis from the input file 286
17.5.50 Rusage: Resource usage 286
17.5.51 Save*: Save a set of outputs 288
17.5.52 Sens*: Run a sensitivity analysis 288
17.5.53 Set: Set the value of a variable 289
17.5.54 Setcirc*: Change the current circuit 289
17.5.55 Setplot: Switch the current set of vectors 289
17.5.56 Setscale: Set the scale vector for the current plot 289
17.5.57 Settype: Set the type of a vector 290
17.5.58 Shell: Call the command interpreter 290
17.5.59 Shift: Alter a list variable 290
17.5.60 Show*: List device state 290
17.5.61 Showmod*: List model parameter values 291
17.5.62 Source: Read a ngspice input file 291
17.5.63 Spec: Create a frequency domain plot 291
17.5.64 Status*: Display breakpoint information 292
17.5.65 Step*: Run a fixed number of time-points 292
17.5.66 Stop*: Set a breakpoint 292
17.5.67 Strcmp: Compare two strings 293
17.5.68 Sysinfo*: Print system information 293
17.5.69 Tf*: Run a Transfer Function analysis 294
17.5.70 Trace*: Trace nodes 295

17.5.71 Tran*: Perform a transient analysis . . . 295
17.5.72 Transpose: Swap the elements in a multi-dimensional data set . . . 295
17.5.73 Unalias: Retract an alias . . . 295
17.5.74 Undefine: Retract a definition . . . 296
17.5.75 Unlet: Delete the specified vector(s) . . . 296
17.5.76 Unset: Clear a variable . . . 296
17.5.77 Version: Print the version of ngspice . . . 296
17.5.78 Where*: Identify troublesome node or device . . . 297
17.5.79 Wrdata: Write data to a file (simple table) . . . 297
17.5.80 Write: Write data to a file (Spice3f5 format) . . . 298
17.5.81 Wrs2p: Write scattering parameters to file (Touchstone® format) . . . 298
17.5.82 Xgraph: use the xgraph(1) program for plotting. . . . 299
17.6 Control Structures . . . 299
17.6.1 While - End . . . 299
17.6.2 Repeat - End . . . 299
17.6.3 Dowhile - End . . . 300
17.6.4 Foreach - End . . . 300
17.6.5 If - Then - Else . . . 300
17.6.6 Label . . . 300
17.6.7 Goto . . . 301
17.6.8 Continue . . . 301
17.6.9 Break . . . 301
17.7 Variables . . . 301
17.8 Scripts . . . 306
17.8.1 Variables . . . 306
17.8.2 Vectors . . . 307
17.8.3 Commands . . . 307
17.8.4 control structures . . . 307
17.8.5 Example script 'spectrum' . . . 311
17.8.6 Example script for random numbers . . . 313
17.8.7 Parameter sweep . . . 314
17.8.8 Output redirection . . . 314
17.9 Scattering parameters (s-parameters) . . . 315
17.9.1 Intro . . . 315
17.9.2 S-parameter measurement basics . . . 316
17.9.3 Usage . . . 317
17.10 MISCELLANEOUS (old stuff, has to be checked for relevance) . . . 318
17.11 Bugs (old stuff, has to be checked for relevance) . . . 318

18 Ngspice User Interfaces **319**
18.1 MS Windows Graphical User Interface . . . 319
18.2 MS Windows Console . . . 321
18.3 LINUX . . . 322
18.4 CygWin . . . 322
18.5 Error handling . . . 322
18.6 Postscript printing options . . . 322
18.7 Gnuplot . . . 324
18.8 Integration with CAD software and “third party” GUIs . . . 324
18.8.1 KJWaves . . . 324
18.8.2 GNU Spice GUI . . . 324
18.8.3 XCircuit . . . 324
18.8.4 GEDA . . . 324

19 TCLspice **325**
19.1 tclspice framework . . . 325
19.2 tclspice documentation . . . 325
19.3 spicetoblt . . . 325
19.4 Running TCLspice . . . 326
19.5 examples . . . 326
19.5.1 Active capacitor measurement . . . 326
19.5.2 Optimization of a linearization circuit for a Thermistor . . . 329
19.5.3 Progressive display . . . 333
19.6 Compiling . . . 334
19.6.1 LINUX . . . 334
19.6.2 MS Windows . . . 334

20 Example Circuits **335**
20.1 AC coupled transistor amplifier . . . 335
20.2 Differential Pair . . . 340
20.3 MOSFET Characterization . . . 341
20.4 RTL Inverter . . . 341
20.5 Four-Bit Binary Adder (Bipolar) . . . 342
20.6 Four-Bit Binary Adder (MOS) . . . 344
20.7 Transmission-Line Inverter . . . 345

21 Statistical circuit analysis **347**
21.1 Introduction . . . 347
21.2 Using random param(eters) . . . 347
21.3 Behavioral sources (B, E, G, R, L, C) with random control . . . 349
21.4 ngspice scripting language . . . 350
21.5 Monte-Carlo Simulation . . . 351
21.5.1 Example 1 . . . 351
21.5.2 Example 2 . . . 353
21.6 Data evaluation with Gnuplot . . . 353

22 Circuit optimization with ngspice **355**
22.1 Optimization of a circuit . . . 355
22.2 ngspice optimizer using ngspice scripts . . . 356
22.3 ngspice optimizer using tclspice . . . 356
22.4 ngspice optimizer using a Python script . . . 356
22.5 ngspice optimizer using ASCO . . . 356
22.5.1 Three stage operational amplifier . . . 357
22.5.2 Digital inverter . . . 358
22.5.3 Bandpass . . . 360
22.5.4 Class-E power amplifier . . . 360

23 Notes **361**
23.1 Glossary . . . 361
23.2 Acronyms and Abbreviations . . . 362

II XSPICE Software User's Manual **365**

24 XSPICE Basics **367**
24.1 ngspice with the XSPICE option . . . 367
24.2 The XSPICE Code Model Subsystem . . . 367
24.3 XSPICE Top-Level Diagram . . . 368

25 Execution Procedures **369**
25.1 Simulation and Modeling Overview . . . 369
25.1.1 Describing the Circuit . . . 369
25.2 Circuit Description Syntax . . . 375
25.2.1 XSPICE Syntax Extensions . . . 375
25.3 How to create code models . . . 377

26 Example circuits **381**
26.1 Amplifier with XSPICE model "gain" . . . 381
26.2 XSPICE advanced usage . . . 383
26.2.1 Circuit example C3 . . . 383
26.2.2 Running example C3 . . . 386

27 Code Models and User-Defined Nodes **391**
27.1 Code Model Data Type Definitions . . . 392
27.2 Creating Code Models . . . 392
27.3 Creating User-Defined Nodes . . . 393
27.4 Adding a new code model library . . . 394
27.5 Compiling and loading the new code model (library) . . . 394
27.6 Interface Specification File . . . 395
27.6.1 The Name Table . . . 397
27.6.2 The Port Table . . . 397
27.6.3 The Parameter Table . . . 399
27.6.4 Static Variable Table . . . 400
27.7 Model Definition File . . . 402
27.7.1 Macros . . . 402
27.7.2 Function Library . . . 411
27.8 User-Defined Node Definition File . . . 418
27.8.1 Macros . . . 418
27.8.2 Function Library . . . 418
27.8.3 Example UDN Definition File . . . 422

28 Error Messages **425**
28.1 Preprocessor Error Messages . . . 425
28.2 Simulator Error Messages . . . 430
28.3 Code Model Error Messages . . . 431
28.3.1 Code Model aswitch . . . 431
28.3.2 Code Model climit . . . 432
28.3.3 Code Model core . . . 432
28.3.4 Code Model d_osc . . . 432
28.3.5 Code Model d_source . . . 433
28.3.6 Code Model d_state . . . 433
28.3.7 Code Model oneshot . . . 434

28.3.8 Code Model pwl 434
28.3.9 Code Model s_xfer 434
28.3.10 Code Model sine 435
28.3.11 Code Model square 435
28.3.12 Code Model triangle 436

III CIDER 437

29 CIDER User's Manual 439
29.1 SPECIFICATION 439
29.1.1 Examples 440
29.2 BOUNDARY, INTERFACE 441
29.2.1 DESCRIPTION 441
29.2.2 PARAMETERS 442
29.2.3 EXAMPLES 442
29.3 COMMENT 442
29.3.1 DESCRIPTION 443
29.3.2 EXAMPLES 443
29.4 CONTACT 443
29.4.1 DESCRIPTION 443
29.4.2 PARAMETERS 443
29.4.3 EXAMPLES 443
29.4.4 SEE ALSO 443
29.5 DOMAIN, REGION 444
29.5.1 DESCRIPTION 444
29.5.2 PARAMETERS 444
29.5.3 EXAMPLES 444
29.5.4 SEE ALSO 445
29.6 DOPING 445
29.6.1 DESCRIPTION 445
29.6.2 PARAMETERS 448
29.6.3 EXAMPLES 448
29.6.4 SEE ALSO 449
29.7 ELECTRODE 449
29.7.1 DESCRIPTION 449

29.7.2 PARAMETERS 450
29.7.3 EXAMPLES 450
29.7.4 SEE ALSO 450
29.8 END 450
29.8.1 DESCRIPTION 451
29.9 MATERIAL 451
29.9.1 DESCRIPTION 451
29.9.2 PARAMETERS 452
29.9.3 EXAMPLES 452
29.9.4 SEE ALSO 452
29.10METHOD 453
29.10.1 DESCRIPTION 453
29.10.2 Parameters 453
29.10.3 Examples 453
29.11Mobility 454
29.11.1 Description 454
29.11.2 Parameters 455
29.11.3 Examples 455
29.11.4 SEE ALSO 455
29.11.5 BUGS 456
29.12MODELS 456
29.12.1 DESCRIPTION 456
29.12.2 Parameters 456
29.12.3 Examples 456
29.12.4 See also 457
29.12.5 Bugs 457
29.13OPTIONS 457
29.13.1 DESCRIPTION 457
29.13.2 Parameters 458
29.13.3 Examples 458
29.13.4 See also 458
29.14OUTPUT 459
29.14.1 DESCRIPTION 459
29.14.2 Parameters 460
29.14.3 Examples 460

29.14.4 SEE ALSO . . . 461
29.15TITLE . . . 461
29.15.1 DESCRIPTION . . . 461
29.15.2 EXAMPLES . . . 461
29.15.3 BUGS . . . 461
29.16X.MESH, Y.MESH . . . 461
29.16.1 DESCRIPTION . . . 462
29.16.2 Parameters . . . 463
29.16.3 EXAMPLES . . . 463
29.16.4 SEE ALSO . . . 463
29.17NUMD . . . 464
29.17.1 DESCRIPTION . . . 464
29.17.2 Parameters . . . 465
29.17.3 EXAMPLES . . . 465
29.17.4 SEE ALSO . . . 466
29.17.5 BUGS . . . 466
29.18NBJT . . . 466
29.18.1 DESCRIPTION . . . 466
29.18.2 Parameters . . . 467
29.18.3 EXAMPLES . . . 467
29.18.4 SEE ALSO . . . 468
29.18.5 BUGS . . . 468
29.19NUMOS . . . 468
29.19.1 DESCRIPTION . . . 468
29.19.2 Parameters . . . 469
29.19.3 EXAMPLES . . . 469
29.19.4 SEE ALSO . . . 470
29.20Cider examples . . . 470

IV Appendices 471

30 Model and Device Parameters 473

30.1 Elementary Devices . . . 475
30.1.1 Resistor . . . 475
30.1.2 Capacitor - Fixed capacitor . . . 477

30.1.3 Inductor - Fixed inductor 478
30.1.4 Mutual - Mutual Inductor 479
30.2 Voltage and current sources 480
30.2.1 ASRC - Arbitrary source 480
30.2.2 Isource - Independent current source 481
30.2.3 Vsource - Independent voltage source 482
30.2.4 CCCS - Current controlled current source 483
30.2.5 CCVS - Current controlled voltage source 483
30.2.6 VCCS - Voltage controlled current source 484
30.2.7 VCVS - Voltage controlled voltage source 484
30.3 Transmission Lines 485
30.3.1 CplLines - Simple Coupled Multiconductor Lines 485
30.3.2 LTRA - Lossy transmission line 486
30.3.3 Tranline - Lossless transmission line 487
30.3.4 TransLine - Simple Lossy Transmission Line 488
30.3.5 URC - Uniform R. C. line 489
30.4 BJTs 490
30.4.1 BJT - Bipolar Junction Transistor 490
30.4.2 BJT - Bipolar Junction Transistor Level 2 493
30.4.3 VBIC - Vertical Bipolar Inter-Company Model 496
30.5 MOSFETs 500
30.5.1 MOS1 - Level 1 MOSFET model with Meyer capacitance model 500
30.5.2 MOS2 - Level 2 MOSFET model with Meyer capacitance model 503
30.5.3 MOS3 - Level 3 MOSFET model with Meyer capacitance model . . . 507
30.5.4 MOS6 - Level 6 MOSFET model with Meyer capacitance model . . . 511
30.5.5 MOS9 - Modified Level 3 MOSFET model 514
30.5.6 BSIM1 - Berkeley Short Channel IGFET Model 518
30.5.7 BSIM2 - Berkeley Short Channel IGFET Model 521
30.5.8 BSIM3 525
30.5.9 BSIM4 525

31 Compilation notes **527**
31.1 Ngspice Installation under LINUX (and other 'UNIXes') 527
31.1.1 Prerequisites 527
31.1.2 Install from CVS 527

31.1.3 Install from a tarball, e.g. ngspice-rework-24.tgz 528
31.1.4 Advanced Install 529
31.1.5 Compilation using an user defined directory tree for object files 530
31.1.6 Compilers and Options 531
31.1.7 Compiling For Multiple Architectures 531
31.1.8 Installation Names 532
31.1.9 Optional Features 532
31.1.10 Specifying the System Type 532
31.1.11 Sharing Defaults 532
31.1.12 Operation Controls 533
31.2 NGSPICE COMPILATION UNDER WINDOWS OS 533
31.2.1 How to make ngspice with MINGW and MSYS 533
31.2.2 64 Bit executables with MINGW-w64 535
31.2.3 make ngspice with MS Visual Studio 2008 535
31.2.4 make ngspice with pure CYGWIN 536
31.2.5 make ngspice with CYGWIN and external MINGW32 536
31.2.6 make ngspice with CYGWIN and internal MINGW32 (use config.h made above) 538
31.2.7 ngspice mingw or cygwin console executable 538
31.3 Reporting errors 539

32 Copyrights and licenses 541
32.1 Documentation license 541
32.1.1 Spice documentation copyright 541
32.1.2 XSPICE SOFTWARE copyright 541
32.1.3 CIDER RESEARCH SOFTWARE AGREEMENT (superseded by 32.2.1) 542
32.2 ngspice license 542
32.2.1 “Modified” BSD license 543
32.2.2 Linking to GPLd libraries (e.g. readline): 543

Prefaces

Preface to the first edition

This manual has been assembled from different sources:

1. The spice3f5 manual,
2. the XSPICE user's manual,
3. the CIDER user's manual

and some original material needed to describe the new features and the newly implemented models. This cut and paste approach, while not being orthodox, allowed ngspice to have a full manual in a fraction of the time that writing a completely new text would have required. The use of LaTex and Lyx instead of TeXinfo, which was the original encoding for the manual, further helped to reduce the writing effort and improved the quality of the result, at the expense of an on-line version of the manual but, due to the complexity of the software I hardly think that users will ever want to read an on-line text version.

In writing this text I followed the cut of spice3f5 manual, both in the chapter sequence and presentation of material, mostly because that was already the user manual of spice.

Ngspice is an open source software, users can download the source code, compile, and run it. This manual has an entire chapter describing program compilation and available options to help users in building ngspice (see chapt. 31). The source package already comes with all "safe" options enabled by default, and activating the others can produce unpredictable results and thus is recommended to expert users only. This is the first ngspice manual and I have removed all the historical material that described the differences between ngspice and spice3, since it was of no use for the user and not so useful for the developer who can look for it in the Changelogs of in the revision control system.

I want to acknowledge the work dome Emmanuel Rouat and Arno W. Peters for converting to TEXinfo the original spice3f documentation, their effort gave ngspice users the only available documentation that described the changes for many years. A good source of ideas for this manual comes from the on-line spice3f manual written by Charles D.H. Williams (Spice3f5 User Guide), constantly updated and useful for some insight that he gives in it.

As always, errors, omissions and unreadable phrases are only my fault.

Paolo Nenzi

Roma, March 24th 2001

> Indeed. At the end of the day, this is engineering, and one learns to live within the limitations of the tools.

Kevin Aylward , Warden of the Kings Ale

Preface to the actual edition (as of January 2011)

Due to the wealth of new material and options in ngspice the actual order of chapters has been revised. Several new chapters have been added. Thy lyx text processors has allowed adding internal cross references. The pdf format has become the standard format for distribution of the manual. Within each new ngspice distribution (starting with ngspice-21) a manual edition is provided reflecting the ngspice status at the time of distribution. At the same time, located at ngspice manuals, the manual is constantly updated. Every new ngspice feature should enter this manual as soon as it has been made available in the CVS source code.

Holger Vogt

Mülheim, 2011

Acknowledgments

ngspice contributors

Spice was originally written at The University of California at Berkeley (USA).

Since then, there have been many people working on the software, most of them releasing patches to the original code through the Internet.

The following people have contributed in some way:

Vera Albrecht,

Cecil Aswell,

Giles C. Billingsley,

Phil Barker,

Steven Borley,

Stuart Brorson,

Mansun Chan,

Wayne A. Christopher,

Al Davis,

Glao S. Dezai,

Jon Engelbert,

Daniele Foci,

Noah Friedman,

David A. Gates,

Alan Gillespie,

John Heidemann,

Jeffrey M. Hsu,

JianHui Huang,

S. Hwang,

Chris Inbody,

Gordon M. Jacobs,

Min-Chie Jeng,

Beorn Johnson,
Stefan Jones,
Kenneth H. Keller,
Robert Larice,
Mathew Lew,
Robert Lindsell,
Weidong Liu,
Kartikeya Mayaram,
Richard D. McRoberts,
Manfred Metzger,
Wolfgang Muees,
Paolo Nenzi,
Gary W. Ng,
Hong June Park,
Stefano Perticaroli,
Arno Peters,
Serban-Mihai Popescu,
Georg Post,
Thomas L. Quarles,
Emmanuel Rouat,
Jean-Marc Routure,
Jaijeet S. Roychowdhury,
Lionel Sainte Cluque,
Takayasu Sakurai,
Amakawa Shuhei,
Kanwar Jit Singh,
Bill Swartz,
Hitoshi Tanaka,
Steve Tell,
Andrew Tuckey,
Andreas Unger,
Holger Vogt,
Dietmar Warning,
Michael Widlok,
Charles D.H. Williams,

Antony Wilson,

and many others...

If someone helped in the development and has not been inserted in this list then this omission was unintentional. If you feel you should be on this list then please write to <ngspice-devel@lists.sourceforge.net>. Do not be shy, we would like to make a list as complete as possible.

XSPICE

The XSPICE simulator is based on the SPICE3 program developed by the Electronics Research Laboratory, Department of Electrical Engineering and Computer Sciences, University of California at Berkeley. The authors of XSPICE gratefully acknowledge UC Berkeley's development and distribution of this software, and their licensing policies which promote further improvements to simulation technology.

We also gratefully acknowledge the participation and support of our U.S. Air Force sponsors, the Aeronautical Systems Center and the Warner Robins Air Logistics Command, without which the development of XSPICE would not have been possible.

Chapter 1

Introduction

Ngspice is a general-purpose circuit simulation program for nonlinear and linear analyses. Circuits may contain resistors, capacitors, inductors, mutual inductors, independent or dependent voltage and current sources, loss-less and lossy transmission lines, switches, uniform distributed RC lines, and the five most common semiconductor devices: diodes, BJTs, JFETs, MESFETs, and MOSFETs.

Some introductory remarks on how to use ngspice may be found in chapter 20.

Ngspice is an update of Spice3f5, the last Berkeley's release of Spice3 simulator family. Ngspice is being developed to include new features to existing Spice3f5 and to fix its bugs. Improving a complex software like a circuit simulator is a very hard task and, while some improvements have been made, most of the work has been done on bug fixing and code refactoring.

Ngspice has built-in models for the semiconductor devices, and the user need specify only the pertinent model parameter values. There are three models for bipolar junction transistors, all based on the integral-charge model of Gummel and Poon; however, if the Gummel-Poon parameters are not specified, the basic model (BJT) reduces to the simpler Ebers-Moll model. In either case and in either models, charge storage effects, ohmic resistances, and a current-dependent output conductance may be included. The second bipolar model BJT2 adds dc current computation in the substrate diode. The third model (VBIC) contains further enhancements for advanced bipolar devices.

The semiconductor diode model can be used for either junction diodes or Schottky barrier diodes. There are two models for JFET: the first (JFET) is based on the model of Shichman and Hodges, the second (JFET2) is based on the Parker-Skellern model. All the original six MOSFET models are implemented: MOS1 is described by a square-law I-V characteristic, MOS2 [1] is an analytical model, while MOS3 [1] is a semi-empirical model; MOS6 [2] is a simple analytic model accurate in the short channel region; MOS9, is a slightly modified Level 3 MOSFET model - not to confuse with Philips level 9; BSIM 1 [3, 4]; BSIM2 [5] are the old BSIM (Berkeley Short-channel IGFET Model) models. MOS2, MOS3, and BSIM include second-order effects such as channel-length modulation, subthreshold conduction, scattering-limited velocity saturation, small-size effects, and charge controlled capacitances. The recent MOS models for submicron devices are the BSIM3 (Berkeley BSIM3 web page) and BSIM4 (Berkeley BSIM4 web page) models. Silicon-on-insulator MOS transistors are described by the SOI models from the BSIMSOI family (Berkeley BSIMSOI web page) and the STAG [18] one. There is partial support for a couple of HFET models and one model for MESA devices.

Ngspice supports mixed-level simulation and provides a direct link between technology parameters and circuit performance. A mixed-level circuit and device simulator can provide greater simulation accuracy than a stand-alone circuit or device simulator by numerically modeling the critical devices in a circuit. Compact models can be used for noncritical devices. The mixed-level extensions to ngspice are two:

- CIDER: a mixed-level circuit and device simulator integrated into ngspice code. CIDER was originally the name of the mixed-level extension made to spice3f5.
- GSS: GSS (now called GENIUS) TCAD is a 2D simulator developed independently from ngspice. The device simulator itself is free and not included into ngspice, but a socket interface is provided.

Ngspice supports mixed-signal simulation through the integration of XSPICE code into it. XSPICE software, developed as an extension to Spice3C1 from GeorgiaTech, has been ported to ngspice to provide "board" level and mixed-signal simulation.

New devices can be added to ngspice by two means: the xspice old code-model interface and the new ADMS interface based on Verilog-A and XML.

Finally, numerous small bugs have been discovered and fixed, and the program has been ported to a wider variety of computing platforms.

1.1 Simulation Algorithms

Computer-based circuit simulation is often used as a tool by designers, test engineers, and others who want to analyze the operation of a design without examining the physical circuit. Simulation allows you to change quickly the parameters of many of the circuit elements to determine how they affect the circuit response. Often it is difficult or impossible to change these parameters in a physical circuit.

However, to be practical, a simulator must execute in a reasonable amount of time. The key to efficient execution is choosing the proper level of modeling abstraction for a given problem. To support a given modeling abstraction, the simulator must provide appropriate algorithms.

Historically, circuit simulators have supported either an analog simulation algorithm or a digital simulation algorithm. Ngspice inherits the XSPICE framework and supports both analog and digital algorithms and is a "mixed-mode" simulator.

1.1.1 Analog Simulation

Analog simulation focuses on the linear and non-linear behavior of a circuit over a continuous time or frequency interval. The circuit response is obtained by iteratively solving Kirchhoff's Laws for the circuit at time steps selected to ensure the solution has converged to a stable value and that numerical approximations of integrations are sufficiently accurate. Since Kirchhoff's laws form a set of simultaneous equations, the simulator operates by solving a matrix of equations at each time point. This matrix processing generally results in slower simulation times when compared to digital circuit simulators.

The response of a circuit is a function of the applied sources. Ngspice offers a variety of source types including DC, sine-wave, and pulse. In addition to specifying sources, the user must define the type of simulation to be run. This is termed the "mode of analysis". Analysis modes include DC analysis, AC analysis, and transient analysis. For DC analysis, the time-varying behavior of reactive elements is neglected and the simulator calculates the DC solution of the circuit. Swept DC analysis may also be accomplished with ngspice. This is simply the repeated application of DC analysis over a range of DC levels for the input sources. For AC analysis, the simulator determines the response of the circuit, including reactive elements to small-signal sinusoidal inputs over a range of frequencies. The simulator output in this case includes amplitudes and phases as a function of frequency. For transient analysis, the circuit response, including reactive elements, is analyzed to calculate the behavior of the circuit as a function of time.

1.1.2 Digital Simulation

Digital circuit simulation differs from analog circuit simulation in several respects. A primary difference is that a solution of Kirchhoff's laws is not required. Instead, the simulator must only determine whether a change in the logic state of a node has occurred and propagate this change to connected elements. Such a change is called an "event".

When an event occurs, the simulator examines only those circuit elements that are affected by the event. As a result, matrix analysis is not required in digital simulators. By comparison, analog simulators must iteratively solve for the behavior of the entire circuit because of the forward and reverse transmission properties of analog components. This difference results in a considerable computational advantage for digital circuit simulators, which is reflected in the significantly greater speed of digital simulations.

1.1.3 Mixed-Mode Simulation

Modern circuits often contain a mix of analog and digital circuits. To simulate such circuits efficiently and accurately a mix of analog and digital simulation techniques is required. When analog simulation algorithms are combined with digital simulation algorithms, the result is termed "mixed-mode simulation".

Two basic methods of implementing mixed-mode simulation used in practice are the "native mode" and "glued mode" approaches. Native mode simulators implement both an analog algorithm and a digital algorithm in the same executable. Glued mode simulators actually use two simulators, one of which is analog and the other digital. This type of simulator must define an input/output protocol so that the two executables can communicate with each other effectively. The communication constraints tend to reduce the speed, and sometimes the accuracy, of the complete simulator. On the other hand, the use of a glued mode simulator allows the component models developed for the separate executables to be used without modification.

Ngspice is a native mode simulator providing both analog and event-based simulation in the same executable. The underlying algorithms of ngspice (coming from XSPICE and its Code Model Subsystem) allow use of all the standard SPICE models, provide a pre-defined collection of the most common analog and digital functions, and provide an extensible base on which to build additional models.

1.1.3.1 User-Defined Nodes

Ngspice supports creation of "User-Defined Node" types. User-Defined Node types allow you to specify nodes that propagate data other than voltages, currents, and digital states. Like digital nodes, User-Defined Nodes use event-driven simulation, but the state value may be an arbitrary data type. A simple example application of User-Defined Nodes is the simulation of a digital signal processing filter algorithm. In this application, each node could assume a real or integer value. More complex applications may define types that involve complex data such as digital data vectors or even non-electronic data.

Ngspice digital simulation is actually implemented as a special case of this User-Defined Node capability where the digital state is defined by a data structure that holds a Boolean logic state and a strength value.

1.1.4 Mixed-Level Simulation

Ngspice can simulate numerical device models for diodes and transistors in two different ways, either through the integrated DSIM simulator or interfacing to GSS TCAD system. DSIM is an internal C-based device simulator which is part of the CIDER simulator, the mixed-level simulator based on spice3f5. CIDER within ngspice provides circuit analyses, compact models for semiconductor devices, and one- or two-dimesional numerical device models.

1.1.4.1 CIDER (DSIM)

DSIM provides accurate, one- and two-dimensional numerical device models based on the solution of Poisson's equation, and the electron and hole current-continuity equations. DSIM incorporates many of the same basic physical models found in the Stanford two-dimensional device simulator PISCES. Input to CIDER consists of a SPICE-like description of the circuit and its compact models, and PISCES-like descriptions of the structures of numerically modeled devices. As a result, CIDER should seem familiar to designers already accustomed to these two tools. CIDER is based on the mixed-level circuit and device simulator CODECS, and is a replacement for this program. The basic algorithms of the two programs are the same. Some of the differences between CIDER and CODECS are described below. The CIDER input format has greater flexibility and allows increased access to physical model parameters. New physical models have been added to allow simulation of state-of-the-art devices. These include transverse field mobility degradation important in scaled-down MOSFETs and a polysilicon model for poly-emitter bipolar transistors. Temperature dependence has been included over the range from -50C to 150C. The numerical models can be used to simulate all the basic types of semiconductor devices: resistors, MOS capacitors, diodes, BJTs, JFETs and MOSFETs. BJTs and JFETs can be modeled with or without a substrate contact. Support has been added for the management of device internal states. Post-processing of device states can be performed using the ngnutmeg user interface.

1.1.4.2 GSS TCAD

GSS is a TCAD software which enables two-dimensional numerical simulation of semiconductor device with well-known drift-diffusion and hydrodynamic method. GSS has Basic DDM

(drift-diffusion method) solver, Lattice Temperature Corrected DDM solver, EBM (energy balance method) solver and Quantum corrected DDM solver which based on density-gradient theory. The GSS program is directed via input statements by a user specified disk file. Supports triangle mesh generation and adaptive mesh refinement. Employs PMI (physical model interface) to support various materials, including compound semiconductor materials such as SiGe and AlGaAs. Supports DC sweep, transient and AC sweep calculations. The device can be stimulated by voltage or current source(s).

GSS is no longer updated, but is still available as open source as a limited edition of the commercial GENIUS TCAD tool.

1.2 Supported Analyses

The ngspice simulator supports the following different types of analysis:

1. DC Analysis (Operating Point and DC Sweep)
2. AC Small- Signal Analysis
3. Transient Analysis
4. Pole-Zero Analysis
5. Small-Signal Distortion Analysis
6. Sensitivity Analysis
7. Noise Analysis

Applications that are exclusively analog can make use of all analysis modes with the exception of Code Model subsystem that do not implements Pole-Zero, Distortion, Sensitivity and Noise analyses. Event-driven applications that include digital and User-Defined Node types may make use of DC (operating point and DC sweep) and Transient only.

In order to understand the relationship between the different analyses and the two underlying simulation algorithms of ngspice, it is important to understand what is meant by each analysis type. This is detailed below.

1.2.1 DC Analyses

The dc analysis portion of ngspice determines the dc operating point of the circuit with inductors shorted and capacitors opened. The dc analysis options are specified on the `.DC`, `.TF`, and `.OP` control lines.

There is assumed to be no time dependence on any of the sources within the system description. The simulator algorithm subdivides the circuit into those portions which require the analog simulator algorithm and those which require the event-driven algorithm. Each subsystem block is then iterated to solution, with the interfaces between analog nodes and event-driven nodes iterated for consistency across the entire system.

Once stable values are obtained for all nodes in the system, the analysis halts and the results may be displayed or printed out as you request them.

A dc analysis is automatically performed prior to a transient analysis to determine the transient initial conditions, and prior to an ac small-signal analysis to determine the linearized, small-signal models for nonlinear devices. If requested, the dc small-signal value of a transfer function (ratio of output variable to input source), input resistance, and output resistance is also computed as a part of the dc solution. The dc analysis can also be used to generate dc transfer curves: a specified independent voltage, current source, resistor or temperature[1] is stepped over a user-specified range and the dc output variables are stored for each sequential source value.

1.2.2 AC Small-Signal Analysis

AC analysis is limited to analog nodes and represents the small signal, sinusoidal solution of the analog system described at a particular frequency or set of frequencies. This analysis is similar to the DC analysis in that it represents the steady-state behavior of the described system with a single input node *at a given set of stimulus frequencies*.

The program first computes the dc operating point of the circuit and determines linearized, small-signal models for all of the nonlinear devices in the circuit. The resultant linear circuit is then analyzed over a user-specified range of frequencies. The desired output of an ac small-signal analysis is usually a transfer function (voltage gain, transimpedance, etc). If the circuit has only one ac input, it is convenient to set that input to unity and zero phase, so that output variables have the same value as the transfer function of the output variable with respect to the input.

1.2.3 Transient Analysis

Transient analysis is an extension of DC analysis to the time domain. A transient analysis begins by obtaining a DC solution to provide a point of departure for simulating time-varying behavior. Once the DC solution is obtained, the time-dependent aspects of the system are reintroduced, and the two simulator algorithms incrementally solve for the time varying behavior of the entire system. Inconsistencies in node values are resolved by the two simulation algorithms such that the time-dependent waveforms created by the analysis are consistent across the entire simulated time interval. Resulting time-varying descriptions of node behavior for the specified time interval are accessible to you.

All sources which are not time dependent (for example, power supplies) are set to their dc value. The transient time interval is specified on a `.TRAN` control line.

1.2.4 Pole-Zero Analysis

The pole-zero analysis portion of Ngspice computes the poles and/or zeros in the small-signal ac transfer function. The program first computes the dc operating point and then determines the linearized, small-signal models for all the nonlinear devices in the circuit. This circuit is

[1] Temperature (`TEMP`) and resistance sweeps have been introduced in Ngspice, they were not available in the original code of Spice3f5.

then used to find the poles and zeros of the transfer function. Two types of transfer functions are allowed: one of the form (output voltage)/(input voltage) and the other of the form (output voltage)/(input current). These two types of transfer functions cover all the cases and one can find the poles/zeros of functions like input/output impedance and voltage gain. The input and output ports are specified as two pairs of nodes. The pole-zero analysis works with resistors, capacitors, inductors, linear-controlled sources, independent sources, BJTs, MOSFETs, JFETs and diodes. Transmission lines are not supported. The method used in the analysis is a sub-optimal numerical search. For large circuits it may take a considerable time or fail to find all poles and zeros. For some circuits, the method becomes "lost" and finds an excessive number of poles or zeros.

1.2.5 Small-Signal Distortion Analysis

The distortion analysis portion of Ngspice computes steady-state harmonic and intermodulation products for small input signal magnitudes. If signals of a single frequency are specified as the input to the circuit, the complex values of the second and third harmonics are determined at every point in the circuit. If there are signals of two frequencies input to the circuit, the analysis finds out the complex values of the circuit variables at the sum and difference of the input frequencies, and at the difference of the smaller frequency from the second harmonic of the larger frequency. Distortion analysis is supported for the following nonlinear devices:

- Diodes (DIO),
- BJT,
- JFET,
- MOSFETs (levels 1, 2, 3, 6, 9, BSIM1, BSIM2, BSIM3, BSIM4 and BSIMSOI),
- MESFETS.

All linear devices are automatically supported by distortion analysis. If there are switches present in the circuit, the analysis continues to be accurate provided the switches do not change state under the small excitations used for distortion calculations.

1.2.6 Sensitivity Analysis

Ngspice will calculate either the DC operating-point sensitivity or the AC small-signal sensitivity of an output variable with respect to all circuit variables, including model parameters. Ngspice calculates the difference in an output variable (either a node voltage or a branch current) by perturbing each parameter of each device independently. Since the method is a numerical approximation, the results may demonstrate second order affects in highly sensitive parameters, or may fail to show very low but non-zero sensitivity. Further, since each variable is perturb by a small fraction of its value, zero-valued parameters are not analyzed (this has the benefit of reducing what is usually a very large amount of data).

1.2.7 Noise Analysis

The noise analysis portion of Ngspice does analysis device-generated noise for the given circuit. When provided with an input source and an output port, the analysis calculates the noise contributions of each device (and each noise generator within the device) to the output port voltage. It also calculates the input noise to the circuit, equivalent to the output noise referred to the specified input source. This is done for every frequency point in a specified range - the calculated value of the noise corresponds to the spectral density of the circuit variable viewed as a stationary Gaussian stochastic process. After calculating the spectral densities, noise analysis integrates these values over the specified frequency range to arrive at the total noise voltage/current (over this frequency range). This calculated value corresponds to the variance of the circuit variable viewed as a stationary Gaussian process.

1.2.8 Periodic Steady State Analysis

(Experimental code, not yet made publicly available!)

PSS is a radio frequency periodical large-signal dedicated analysis. The implementation is based on a time domain shooting like method which make use of Transient analysis. As it is in early development stage, PSS performs analysis only on autonomous circuits, meaning that it is only able to predict fundamental frequency and amplitude (and also harmonics) for oscillators, VCOs, etc.. The algorithm is based on a minimum search of the error vector taken as the difference of RHS vectors between two occurrences of an estimated period. The convergence is reached when the mean of error vector decrease below a given threshold that can be set as a analysis parameter. Results of this analysis are the basis of every periodical large-signal analysis as PAC or PNoise.

1.3 Analysis at Different Temperatures

Temperature, in ngspice, is a property associated to the entire circuit, rather an analysis option. Circuit temperature has a default (nominal) value of 27°C (300.15 K) that can be changed using the `TNOM` option in an `.option` control line. All analyses are, thus, performed at circuit temperature, and if you want to simulate circuit behavior at different temperatures you should prepare a netlist for each temperature.

All input data for ngspice is assumed to have been measured at the circuit nominal temperature. This value can further be overridden for any device which models temperature effects by specifying the `TNOM` parameter on the `.model` itself. Individual instances may further override the circuit temperature through the specification of `TEMP` and `DTEMP` parameters on the instance. The two options are not independent even if you can specify both on the instance line, the `TEMP` option overrides `DTEMP`. The algorithm to compute instance temperature is described below:

Algorithm 1.1 Instance temperature computation

```
IF TEMP is specified THEN
instance_temperature = TEMP
ELSE IF
instance_temperature = circuit_temperature + DTEMP
END IF
```

Temperature dependent support is provided for all devices except voltage and current sources (either independent and controlled) and BSIM models. BSIM MOSFETs have an alternate temperature dependency scheme which adjusts all of the model parameters before input to ngspice.

For details of the BSIM temperature adjustment, see [6] and [7]. Temperature appears explicitly in the exponential terms of the BJT and diode model equations. In addition, saturation currents have a built-in temperature dependence. The temperature dependence of the saturation current in the BJT models is determined by:

$$I_S(T_1) = I_S(T_0)\left(\frac{T_1}{T_0}\right)^{XTI} \exp\left(\frac{E_g q(T_1 T_0)}{k(T_1 - T_0)}\right) \tag{1.1}$$

where k is Boltzmann's constant, q is the electronic charge, E_g is the energy gap which is a model parameter, and XTI is the saturation current temperature exponent (also a model parameter, and usually equal to 3).

The temperature dependence of forward and reverse beta is according to the formula:

$$B(T_1) = B(T_0)\left(\frac{T_1}{T_0}\right)^{XTB} \tag{1.2}$$

where T_0 and T_1 are in degrees Kelvin, and XTB is a user-supplied model parameter. Temperature effects on beta are carried out by appropriate adjustment to the values of B_F, I_{SE}, B_R, and I_{SC} (spice model parameters BF, ISE, BR, and ISC, respectively).

Temperature dependence of the saturation current in the junction diode model is determined by:

$$I_S(T_1) = I_S(T_0)\left(\frac{T_1}{T_0}\right)^{\frac{XTI}{N}} \exp\left(\frac{E_g q(T_1 T_0)}{Nk(T_1 - T_0)}\right) \tag{1.3}$$

where N is the emission coefficient, which is a model parameter, and the other symbols have the same meaning as above. Note that for Schottky barrier diodes, the value of the saturation current temperature exponent, XTI, is usually 2. Temperature appears explicitly in the value of junction potential, U (in Ngspice PHI), for all the device models.

The temperature dependence is determined by:

$$U(T) = \frac{kT}{q}\ln\left(\frac{N_a N_d}{N_i(T)^2}\right) \tag{1.4}$$

where k is Boltzmann's constant, q is the electronic charge, N_a is the acceptor impurity density, N_d is the donor impurity density, N_i is the intrinsic carrier concentration, and E_g is the energy gap. Temperature appears explicitly in the value of surface mobility, M_0(or U_0), for the MOSFET model.

The temperature dependence is determined by:

$$M_0(T) = \frac{M_0(T_0)}{\left(\frac{T}{T_0}\right)^{1.5}} \tag{1.5}$$

The effects of temperature on resistors, capacitor and inductors is modeled by the formula:

$$R(T) = R(T_0)\left[1 + TC_1(T - T_0) + TC_2(T - T_0)^2\right] \tag{1.6}$$

where T is the circuit temperature, T_0 is the nominal temperature, and TC_1 and TC_2 are the first and second order temperature coefficients.

1.4 Convergence

Ngspice uses the Newton-Raphson algorithm to solve nonlinear equations arising from circuit description. The NR algorithm is interactive and terminates when both of the following conditions hold:

1. The nonlinear branch currents converge to within a tolerance of 0.1% or 1 picoamp (1.0e-12 Amp), whichever is larger.
2. The node voltages converge to within a tolerance of 0.1% or 1 microvolt (1.0e-6 Volt), whichever is larger.

1.4.1 Voltage convergence criterion

The algorithm has reached convergence if the difference between the last iteration k and the current one $(k+1)$:

$$\left|v_n^{(k+1)} - v_n^{(k)}\right| \leq \texttt{RELTOL} * v_{n_{max}} + \texttt{VNTOL} \tag{1.7}$$

where

$$v_{n_{max}} = \max\left(\left|v_n^{(k+1)}\right|, \left|v_n^{(k)}\right|\right) \tag{1.8}$$

The `RELTOL` (RELative TOLerance) parameter, which default value is 10^{-3}, specifies how small the solution update must be, relative to the node voltage, to consider the solution to have converged. The `VNTOL` (absolute convergence) parameter, which has $1\mu V$ as default becomes important when node voltages have near zero values. The relative parameter alone, in such case, would need too strict tolerances, perhaps lower than computer round-off error, and thus convergence would never be achieved. `VNTOL` forces the algorithm to consider as converged any node whose solution update is lower than its value.

1.4.2 Current convergence criterion

Ngspice checks the convergence on the non-linear functions that describe the non-linear branches in circuit elements. In semiconductor devices the functions defines currents through the device and thus the name of the criterion.

Ngspice computes the difference between the value of the nonlinear function computed for last voltage and the linear approximation of the same current computed with the actual voltage:

$$\left| \widehat{i_{branch}^{(k+1)}} - i_{branch}^{(k)} \right| \leq \texttt{RELTOL} * i_{br_{max}} + \texttt{ABSTOL} \tag{1.9}$$

where

$$i_{br_{max}} = \max\left(\widehat{i_{branch}^{(k+1)}}, i_{branch}^{(k)} \right) \tag{1.10}$$

In the two expressions above, the $\widehat{i_{branch}}$ indicates the linear approximation of the current.

1.4.3 Convergence failure

Although the algorithm used in ngspice has been found to be very reliable, in some cases it fails to converge to a solution. When this failure occurs, the program terminates the job. Failure to converge in dc analysis is usually due to an error in specifying circuit connections, element values, or model parameter values. Regenerative switching circuits or circuits with positive feedback probably will not converge in the dc analysis unless the `OFF` option is used for some of the devices in the feedback path, `.nodeset` control line is used to force the circuit to converge to the desired state.

Chapter 2

Circuit Description

2.1 General Structure and Conventions

The circuit to be analyzed is described to ngspice by a set of element lines, which define the circuit topology and element values, and a set of control lines, which define the model parameters and the run controls. All lines are assembled in an input file to be read by ngspice. Two lines are essential:

- The first line in the input file must be the title, which is the only comment line that does not need any special character in the first place.
- The last line must be `.end`.

The order of the remaining lines is arbitrary (except, of course, that continuation lines must immediately follow the line being continued). This feature in the ngspice input language dates back to the punched card times where elements were written on separate cards (and cards frequently fell off). Leading white spaces in a line are ignored, as well as empty lines.

Each element in the circuit is specified by an element line that contains:

- the element name,
- the circuit nodes to which the element is connected,
- and the values of the parameters that determine the electrical characteristics of the element.

The first letter of the element name specifies the element type. The format for the ngspice element types is given in what follows. In the rest of the manual, the strings `XXXXXXX`, `YYYYYYY`, and `ZZZZZZZ` denote arbitrary alphanumeric strings.

For example, a resistor name must begin with the letter `R` and can contain one or more characters. Hence, `R`, `R1`, `RSE`, `ROUT`, and `R3AC2ZY` are valid resistor names. Details of each type of device are supplied in a following section 3.

Fields on a line are separated by one or more blanks, a comma, an equal (=) sign, or a left or right parenthesis; extra spaces are ignored. A line may be continued by entering a "+" (plus) in

column 1 of the following line; ngspice continues reading beginning with column 2. A name field must begin with a letter (A through Z) and cannot contain any delimiters. A number field may be an integer field (12, -44), a floating point field (3.14159), either an integer or floating point number followed by an integer exponent (1e-14, 2.65e3), or either an integer or a floating point number followed by one of the following scale factors:

Suffix	Name	Factor
T	Tera	10^{12}
G	Giga	10^{9}
Meg	Mega	10^{6}
K	Kilo	10^{3}
mil	Mil	25.4×10^{-6}
m	milli	10^{-3}
u	micro	10^{-6}
n	nano	10^{-9}
p	pico	10^{-12}
f	femto	10^{-15}

Table 2.1: Ngspice scale factors

Letters immediately following a number that are not scale factors are ignored, and letters immediately following a scale factor are ignored. Hence, 10, 10V, 10Volts, and 10Hz all represent the same number, and M, MA, MSec, and MMhos all represent the same scale factor. Note that 1000, 1000.0, 1000Hz, 1e3, 1.0e3, 1kHz, and 1k all represent the same number.

Nodes names may be arbitrary character strings and are case insensitive. The ground node must be named “0” (zero). For compatibility reason “gnd” is accepted as ground node, and will internally be treated as a global node and be converted to “0”. **Each circuit has to have a ground node (gnd or 0)!** Note the difference in ngspice where the nodes are treated as character strings and not evaluated as numbers, thus “0” and “00” are distinct nodes in ngspice but not in SPICE2.

Ngspice requires that the following topological constraints are satisfied:

- The circuit cannot contain a loop of voltage sources and/or inductors and cannot contain a cut-set of current sources and/or capacitors.

- Each node in the circuit must have a dc path to ground.

- Every node must have at least two connections except for transmission line nodes (to permit unterminated transmission lines) and MOSFET substrate nodes (which have two internal connections anyway).

2.2 Basic lines

2.2.1 .TITLE line

Examples:

```
POWER AMPLIFIER CIRCUIT
* additional lines following
*...

Test of CAM cell
* additional lines following
*...
```

The title line must be the first in the input file. Its contents are printed verbatim as the heading for each section of output.

As an alternative you may place a `.TITLE <any title>` line anywhere in your input deck. The first line of your input deck will be overridden by the contents of this line following the .TITLE statement.

.TITLE line example:

```
*****************************
* additional lines following
*...
.TITLE Test of CAM cell
* additional lines following
*...
```

will internally be replaced by

Internal input deck:

```
Test of CAM cell
* additional lines following
*...
*TITLE Test of CAM cell
* additional lines following
*...
```

2.2.2 .END Line

Examples:

```
.end
```

The ".End" line must always be the last in the input file. Note that the period is an integral part of the name.

2.2.3 Comments

General Form:

```
* <any comment>
```

Examples:

```
* RF=1K Gain should be 100
* Check open-loop gain and phase margin
```

The asterisk in the first column indicates that this line is a comment line. Comment lines may be placed anywhere in the circuit description.

2.2.4 End-of-line comments

General Form:

```
<any command> ;<any comment>
```

Examples:

```
RF2=1K ;Gain should be 100
C1=10p $ Check open-loop gain and phase margin
```

ngspice supports comments that begin with single characters ';' or double characters '$ ' or '//' or '–'

2.3 Device Models

General form:

```
.model mname type(pname1=pval1 pname2=pval2 ... )
```

Examples:

```
.model MOD1 npn (bf=50 is=1e-13 vbf=50)
```

Most simple circuit elements typically require only a few parameter values. However, some devices (semiconductor devices in particular) that are included in ngspice require many parameter values. Often, many devices in a circuit are defined by the same set of device model parameters. For these reasons, a set of device model parameters is defined on a separate `.model` line and assigned a unique model name. The device element lines in ngspice then refer to the model name.

For these more complex device types, each device element line contains the device name, the nodes to which the device is connected, and the device model name. In addition, other optional parameters may be specified for some devices: geometric factors and an initial condition (see the following section on Transistors (8 to 11) and Diodes (7) for more details). `mname` in the above is the model name, and type is one of the following fifteen types:

Parameter values are defined by appending the parameter name followed by an equal sign and the parameter value. Model parameters that are not given a value are assigned the default values

Code	Model Type
R	Semiconductor resistor model
C	Semiconductor capacitor model
L	Inductor model
SW	Voltage controlled switch
CSW	Current controlled switch
URC	Uniform distributed RC model
LTRA	Lossy transmission line model
D	Diode model
NPN	NPN BJT model
PNP	PNP BJT model
NJF	N-channel JFET model
PJF	P-channel JFET model
NMOS	N-channel MOSFET model
PMOS	P-channel MOSFET model
NMF	N-channel MESFET model
PMF	P-channel MESFET model

Table 2.2: Ngspice model types

given below for each model type. Models are listed in the section on each device along with the description of device element lines. Model parameters and their default values are given in chapter 30.

2.4 Subcircuits

A subcircuit that consists of ngspice elements can be defined and referenced in a fashion similar to device models. Subcircuits are the way ngspice implements hierarchical modeling, but this is not entirely true because each subcircuit instance is flattened during parsing, and thus ngspice is not a hierarchical simulator.

The subcircuit is defined in the input deck by a grouping of element cards delimited by the `.subckt` and the `.ends` cards (or the keywords defined by the substart and subend options (see 17.7)); the program then automatically inserts the defined group of elements wherever the subcircuit is referenced. Instances of subcircuits within a larger circuit are defined through the use of an instance card which begins with the letter "`X`". A complete example of all three of these cards follows:

```
Example:

* The following is the instance card:
*
xdiv1 10 7 0 vdivide

* The following are the subcircuit definition cards:
*
.subckt vdivide 1 2 3
r1 1 2 10K
r2 2 3 5K
.ends
```

The above specifies a subcircuit with ports numbered “1”, “2” and “3”:

- Resistor ”R1” is connected from port “1” to port “2”, and has value 10 kOhms.
- Resistor “R2” is connected from port “2” to port “3”, and has value 5 kOhms.

The instance card, when placed in an ngspice deck, will cause subcircuit port “1” to be equated to circuit node “10”, while port “2” will be equated to node “7” and port “3” will equated to node “0”.

There is no limit on the size or complexity of subcircuits, and subcircuits may contain other subcircuits. An example of subcircuit usage is given in chapter 20.6.

2.4.1 .SUBCKT Line

General form:

```
.SUBCKT subnam N1 <N2 N3 ...>
```

Examples:

```
.SUBCKT OPAMP 1 2 3 4
```

A circuit definition is begun with a `.SUBCKT` line. SUBNAM is the subcircuit name, and N1, N2, ... are the external nodes, which cannot be zero. The group of element lines which immediately follow the `.SUBCKT` line define the subcircuit. The last line in a subcircuit definition is the `.ENDS` line (see below). Control lines may not appear within a subcircuit definition; however, subcircuit definitions may contain anything else, including other subcircuit definitions, device models, and subcircuit calls (see below). Note that any device models or subcircuit definitions included as part of a subcircuit definition are strictly local (i.e., such models and definitions are not known outside the subcircuit definition). Also, any element nodes not included on the `.SUBCKT` line are strictly local, with the exception of 0 (ground) which is always global. If you use parameters, the `.SUBCKT` line will be extended (see 2.8.3).

2.4.2 .ENDS Line

General form:

```
.ENDS <SUBNAM>
```

Examples:

```
.ENDS OPAMP
```

The `.ENDS` line must be the last one for any subcircuit definition. The subcircuit name, if included, indicates which subcircuit definition is being terminated; if omitted, all subcircuits being defined are terminated. The name is needed only when nested subcircuit definitions are being made.

2.4.3 Subcircuit Calls

General form:

```
XYYYYYYY N1 <N2 N3 ...> SUBNAM
```

Examples:

```
X1 2 4 17 3 1 MULTI
```

Subcircuits are used in ngspice by specifying pseudo-elements beginning with the letter X, followed by the circuit nodes to be used in expanding the subcircuit. If you use parameters, the subcircuit call will be modified (see 2.8.3).

2.5 .GLOBAL

General form:

```
.GLOBAL nodename
```

Examples:

```
.GLOBAL gnd vcc
```

Nodes defined in the .GLOBAL statement are available to all circuit and subcircuit blocks independently from any circuit hierarchy. After parsing the circuit, these nodes are accessible from top level.

2.6 .INCLUDE

General form:

```
.INCLUDE filename
```

Examples:

```
.INCLUDE /users/spice/common/wattmeter.cir
```

Frequently, portions of circuit descriptions will be reused in several input files, particularly with common models and subcircuits. In any ngspice input file, the `.INCLUDE` line may be used to copy some other file as if that second file appeared in place of the `.INCLUDE` line in the original file.

There is no restriction on the file name imposed by ngspice beyond those imposed by the local operating system.

2.7 .LIB

General form:

```
.LIB filename libname
```

Examples:

```
.LIB /users/spice/common/mosfets.lib mos1
```

The `.LIB` statement allows to include library descriptions into the input file. Inside the *.lib file a library **libname** will be selected. The statements of each library inside the *.lib file are enclosed in `.LIB libname <...> .ENDL` statements.

If the compatibility mode (16.13) is set to `'ps'` by `set ngbehavior=ps` (17.7) in spinit (16.5) or .spiceinit (16.6), then a simplyfied syntax `.LIB filename` is available: a warning is issued and `filename` is simply included as described in chapt. 2.6.

2.8 .PARAM Parametric netlists

Ngspice allows for the definition of parametric attributes in the netlists. This is an enhancement of the ngspice front-end which adds arithmetic functionality to the circuit description language.

2.8.1 .param line

General form:

```
.param <ident> = <expr> ; <ident> = <expr> ....
```

Examples:

```
.param pippo=5
.param pp=6
.param pippp={pippo + pp}
.param p={pp}
.param pap='pp+p'
```

This line assigns numerical values to identifiers. More than one assignment per line is possible using the ';' separator. The `.param` lines inside subcircuits are copied per call, like any other line. All assignments are executed sequentially through the expanded circuit. Before its first use, a parameter name must have been assigned a value. Expression defining a parameter have to be put into braces `{p+p2}`, alternatively into single quotes `'p+p2'`.

2.8.2 Brace expressions in circuit elements:

General form:

```
{ <expr> }
```

Examples:

These are allowed in `.model` lines and in device lines. A spice number is a floating point number with an optional scaling suffix, immediately glued to the numeric tokens (see chapt. 2.8.5). Brace expressions ({..}) cannot be used to parametrize node names or parts of names. All identifiers used within an `<expr>` must have known values at the time when the line is evaluated, else an error is flagged.

2.8.3 Subcircuit parameters

General form:

```
.subckt <identn> node node ...  <ident>=<value> <ident>=<value> ...
```

Examples:

```
.subckt myfilter in out rval=100k cval=100nF
```

`<identn>` is the name of the subcircuit given by the user. **`node`** is an integer number or an identifier, for one of the external nodes. The first **`<ident>=<value>`** introduces an optional section of the line. Each **`<ident>`** is a formal parameter, and each **`<value>`** is either a spice number or a brace expression. Inside the "`.subckt`" ... "`.ends`" context, each formal parameter may be used like any identifier that was defined on a .param control line. The **`<value>`** parts are supposed to be default values of the parameters. However, in the current version of , they are not used and each invocation of the subcircuit must supply the _exact_ number of actual parameters.

The syntax of a subcircuit call (invocation) is:

General form:

```
X<name> node node ... <identn> <ident>=<value> <ident>=<value> ...
```

Examples:

```
X1 input output myfilter rval=1k cval=1n
```

Here **`<name>`** is the symbolic name given to that instance of the subcircuit, **`<identn>`** is the name of a subcircuit defined beforehand. **`node node ...`** is the list of actual nodes where the subcircuit is connected. **`<value>`** is either a spice number or a brace expression **`{ <expr> }`**. The sequence of **`<value>`** items on the `X` line must exactly match the number and the order of formal parameters of the subcircuit.

Subcircuit example with parameters:

```
* Param-example
.param amplitude= 1V
*
.subckt myfilter in out rval=100k  cval=100nF
Ra in p1    {2*rval}
Rb p1 out   {2*rval}
C1 p1 0     {2*cval}
Ca in p2    {cval}
Cb p2 out   {cval}
R1 p2 0     {rval}
.ends myfilter
*
X1 input output myfilter rval=1k cval=1n
V1 input 0 AC {amplitude}
.end
```

2.8.4 Symbol scope

All subcircuit and model names are considered global and must be unique. The `.param` symbols that are defined outside of any "`.subckt`" ... "`.ends`" section are global. Inside such a section, the pertaining "`params:`" symbols and any `.param` assignments are considered local: they mask any global identical names, until the `.ends` line is encountered. You cannot reassign to a global number inside a `.subckt`, a local copy is created instead. Scope nesting works up to a level of 10. For example, if the main circuit calls A which has a formal parameter xx, A calls B which has a param. xx, and B calls C which also has a formal param. xx, there will be three versions of 'xx' in the symbol table but only the most local one - belonging to C - is visible.

A word of caution: Ngspice allows to define circuits with nested subcircuits. Currently it is not possible however to issue .param statements inside of a .subckt ... .ends section, when there are additional, nested .subckt ... .ends in the same section. This is a bug, which will be removed asap.

2.8.5 Syntax of expressions

<expr> (optional parts within [...]):

An expression may be one of:

```
<atom> where <atom> is either a spice number or an identifier
<unary-operator> <atom>
<function-name> ( <expr> [ , <expr> ...] )
<atom> <binary-operator> <expr>
( <expr> )
```

As expected, atoms, built-in function calls and stuff within parentheses are evaluated before the other operators. The operators are evaluated following a list of precedence close to the one of the C language. For equal precedence binary ops, evaluation goes left to right.

Operator	Alias	Precedence	Precedence
-		1	unary -
not	!	1	unary not
**	^	2	power
*		3	multiply
/		3	divide
mod	%	3	modulo
div	\	3	integer divide
+		4	add
-		4	subtract
==		5	equality
<>	!=	5	un-equal
<=		5	less or equal
>=		5	greater or equal
<		5	less than
>		5	greater than
and	&&	6	and
or	||	7	or

The result of logical operators is 1 or 0 , for True or False.

Built-in function	Notes
defined	returns 1 if symbol is defined, else 0
sqr(x)	
sqrt(x)	
sin(x)	
cos(x)	
exp(x)	
ln(x)	
arctan(x)	
abs(x)	
floor(x)	Largest integer that is less than or equal to x
ceil(x)	Smallest integer that is greater than or equal to x
pow(x,y)	x raised to the power of y (C runtime library)
pwr(x,y)	exp (y * ln (fabs (x)))
min(x, y)	
max(x, y)	
sgn(x)	1.0 for x > 0, 0.0 for x == 0, -1.0 for x < 0
ternary_fcn(x, y, z)	x ? y : z
gauss(nom, rvar, sigma)	nominal value plus variation drawn from Gaussian distribution with mean 0 and standard deviation rvar (relative to nominal), divided by sigma
agauss(nom, avar, sigma)	nominal value plus variation drawn from Gaussian distribution with mean 0 and standard deviation avar (absolute), divided by sigma
unif(nom, rvar)	nominal value plus relative variation (to nominal) uniformly distributed between +/-rvar
aunif(nom, avar)	nominal value plus absolute variation uniformly distributed between +/-avar
limit(nom, avar)	nominal value +/-avar, depending on random number in [-1, 1[being > 0 or < 0

The scaling suffixes (any decorative alphanumeric string may follow):

suffix	value
g	1e9
meg	1e6
k	1e3
m	1e-3
u	1e-6
n	1e-9
p	1e-12
f	1e-15

Note: there are intentional redundancies in expression syntax, e.g. x^y , x**y and pwr(x,y) all have nearly the same result.

2.8.6 Reserved words

In addition to the above function names and to the verbose operators (not and or div mod), other words are reserved and cannot be used as parameter names: and, or, not, div, mod, if, else, end, while, macro, funct, defined, include, for, to, downto, is, var, sqr, sqrt, sin, cos, exp, ln, arctan, abs, pwr.

2.8.7 Alternative syntax

The & sign is tolerated to provide some "historical" parameter notation: & as the first character of a line is equivalent to: `.param`.

Inside a line, the notation `&(....)` is equivalent to `{....}`, and `&identifier` means the same thing as `{identifier}` .

Comments in the style of C++ line trailers (//) are detected and erased.

Warning: this is NOT possible in embedded .control parts of a source file, these lines are outside of this scope.

Now, there is some possible confusion in ngspice because of multiple numerical expression features. The .param lines and the braces expressions (see next chapter 2.9) are evaluated in the front-end, that is, just after the subcircuit expansion. (Technically, the X lines are kept as comments in the expanded circuit so that the actual parameters can correctly be substituted). So, after the netlist expansion and before the internal data setup, all number attributes in the circuit are known constants. However, there are some circuit elements in Spice which accept arithmetic expressions that are NOT evaluated at this point, but only later during circuit analysis. These are the arbitrary current and voltage sources (B-sources, 5), as well as E- and G-sources and R-, L-, or C-devices. The syntactic difference is that "compile-time" expressions are within braces, but "run-time" expressions have no braces. To make things more complicated, the back-end ngspice scripting language also accepts arithmetic/logic expressions that operate on its own scalar or vector data sets (17.2). Please see also chapt. 2.11.

It would be desirable to have the same expression syntax, operator and function set, and precedence rules, for the three contexts mentioned above. In the current Numparam implementation, that goal is not yet achieved...

2.9 .func

With this line a function may be defined. The syntax of its expression is equivalent to the expression syntax from the .param line (2.8.5).

General form:

```
.func <ident> { <expr> }
```

Examples:

```
.func icos(x) {cos(x) - 1}
.func f(x,y) {x*y}
```

.func will initiate a replacement operation. After reading the input files, and before parameters are evaluated, all occurrences of the `icos(x)` function will be replaced by `cos(x)-1`. All occurrences of `f(x,y)` will be replaced by `x*y`. Function statements may be nested to a depth of t.b.d..

2.10 .csparam

Create a constant vector (see 17.8.2) from a parameter in plot (17.3) "const".

General form:

```
.csparam <ident> = <expr>
```

Examples:

```
.param pippo=5
.param pp=6
.csparam pippp={pippo + pp}
.param p={pp}
.csparam pap='pp+p'
```

In the example shown, vectors pippp, and pap are added to the constants, which already reside in plot "const", with length one and real values. These vectors are generated during circuit parsing and thus cannot be changed later (same as with ordinary parameters). They may be used in ngspice scripts and .control sections (see chapt. 17).

The use of .csparam is still experimental and has to be tested. A simple usage is shown below.

```
* test csparam
.param TEMPS = 27
.csparam newt = {3*TEMPS}
.csparam mytemp = '2 + TEMPS'
.control
echo $&newt $&mytemp
.endc
.end
```

2.11 Parameters, functions, expressions, and command scripts

In ngspice there are several ways to describe functional dependencies. In fact there are three independent function parsers, being active before, during, and after the simulation. So it might be due to have a few words on their interdependence.

2.11.1 Parameters

Parameters (chapt. 2.8.1) and functions, either defined within the `.param` statement or with the `.func` statement (chapt. 2.9) are evaluated **before** any simulation is started, that is during

the setup of the input and the circuit. Therefore these statements may not contain any simulation output (voltage or current vectors), because it is simply not yet available. The syntax is described in chapt. 2.8.5. During the circuit setup all functions are evaluated, all parameters are replaced by their resulting numerical values. Thus it will not be possible to get feedback from a later stage (during or after simulation) to change any of the parameters.

2.11.2 Nonlinear sources

During the simulation, the B source (chapt. 5) and their associated E and G sources, as well as some devices (R, C, L) may contain expressions. These expressions may contain parameters from above (evaluated immediately upon ngspice start up), numerical data, predefined functions, but also node voltages and branch currents which are resulting from the simulation. The source or device values are continuously updated **during** the simulation. Therefore the sources are powerful tools to define non-linear behavior, you may even create new 'devices' by yourself. Unfortunately the expression syntax (see chapt. 5.1) and the predefined functions may deviate from the ones for parameters listed in 2.8.1.

2.11.3 Control commands, Command scripts

Commands, as described in detail in chapt. 17.5, may be used interactively, but also as a command script enclosed in `.control ...  .endc` lines. The scripts may contain expressions (see chapt. 17.2). The expressions may work upon simulation output vectors (of node voltages, branch currents), as well as upon predefined or user defined vectors and variables, and are invoked **after** the simulation. Parameters from 2.8.1 are not allowed in these expressions. Again the expression syntax (see chapt. 17.2) will deviate from the one for parameters or B sources listed in 2.8.1 and 5.1.

If you want to use parameters from 2.8.1 inside your control script, you may apply a trick by defining a voltage source with the parameter as its value, and then have it available as a vector (e.g. after a transient simulation) with a then constant output (the parameter). A feedback from here back into parameters (2.11.1) is never possible. Also you cannot access non-linear sources of the preceding simulation. However you may start a first simulation inside your control script, then evaluate its output using expressions, change some of the element or model parameters with the `alter` and `altermod` statements (see chapt. 17.5.3) and then automatically start a new simulation.

Expressions and scripting are powerful tools within ngspice, and we will enhance the examples given in chapt. 20 continuously to describe these features.

Chapter 3

Circuit Elements and Models

Data fields that are enclosed in less-than and greater-than signs ('< >') are optional. All indicated punctuation (parentheses, equal signs, etc.) is optional but indicate the presence of any delimiter. Further, future implementations may require the punctuation as stated. A consistent style adhering to the punctuation shown here makes the input easier to understand. With respect to branch voltages and currents, ngspice uniformly uses the associated reference convention (current flows in the direction of voltage drop).

3.1 General options and information

3.1.1 Simulating more devices in parallel

If you need to simulate more devices of the same kind in parallel, you can use the `"m"` (often called parallel multiplier) option which is available for all instances except transmission lines and sources (both independent and controlled). The parallel multiplier is implemented by multiplying the value of `m` the element's matrix stamp, thus it cannot be used to accurately simulate larger devices in integrated circuits. The netlist below show how to correctly use the parallel multiplier:

Multiple device example:

```
d1 2 0 mydiode m=10
d01 1 0 mydiode
d02 1 0 mydiode
d03 1 0 mydiode
d04 1 0 mydiode
d05 1 0 mydiode
d06 1 0 mydiode
d07 1 0 mydiode
d08 1 0 mydiode
d09 1 0 mydiode
d10 1 0 mydiode
...
```

The `d1` instance connected between nodes 2 and 0 is equivalent to the parallel `d01-d10` connected between 1 and 0.

3.1.2 Technology scaling

Still to be implemented and written.

3.1.3 Model binning

Binning is a kind of range partitioning for geometry dependent models like MOSFET's. The purpose is to cover larger geometry ranges (Width and Length) with higher accuracy then the model built-in geometry formulaes. Each size range described by the additional model parameters LMIN, LMAX, WMIN and WMAX has its own model parameter set. These model cards are defined by a number extension, like "nch.1". NGSPICE has a algorithm to choose the right model card by the requested W and L.

This is implemented for BSIM3 and BSIM4 model.

3.1.4 Transistors and Diodes

The area factor `"m"` (often called parallel multiplier) used on the diode, BJT, JFET, and MESFET devices determines the number of equivalent parallel devices of a specified model. The affected parameters are marked with an asterisk under the heading "area" in the model descriptions (see the various chapters on models below). Several geometric factors associated with the channel and the drain and source diffusions can be specified on the MOSFET device line.

Two different forms of initial conditions may be specified for some devices. The first form is included to improve the dc convergence for circuits that contain more than one stable state. If a device is specified `OFF`, the dc operating point is determined with the terminal voltages for that device set to zero. After convergence is obtained, the program continues to iterate to obtain the exact value for the terminal voltages. If a circuit has more than one dc stable state, the `OFF` option can be used to force the solution to correspond to a desired state. If a device is specified `OFF` when in reality the device is conducting, the program still obtains the correct solution (assuming the solutions converge) but more iterations are required since the program must independently converge to two separate solutions.

The `.NODESET` control line (see chapt. 15.2.1) serves a similar purpose as the `OFF` option. The `.NODESET` option is easier to apply and is the preferred means to aid convergence. The second form of initial conditions are specified for use with the transient analysis. These are true "initial conditions" as opposed to the convergence aids above. See the description of the `.IC` control line (chapt. 15.2.2) and the `.TRAN` control line (chapt. 15.3.9) for a detailed explanation of initial conditions.

3.2 Elementary Devices

3.2.1 Resistors

General form:

```
RXXXXXXX n+ n− value <ac=val> <m=val> <scale=val> <temp=val>
+ <dtemp=val> <noisy=0|1>
```

Examples:

```
R1  1  2  100
RC1  12  17  1K
R2  5  7  1K  ac=2K
RL  1  4  2K  m=2
```

Ngspice has a fairly complex model for resistors. It can simulate both discrete and semiconductor resistors. Semiconductor resistors in ngspice means: resistors described by geometrical parameters. So, do not expect detailed modeling of semiconductor effects.

`n+` and `n-` are the two element nodes, `value` is the resistance (in ohms) and may be positive or negative[1] but not zero.

Simulating small valued resistors: If you need to simulate very small resistors (0.001 Ohm or less), you should use CCVS (transresistance), it is less efficient but improves overall numerical accuracy. Think about that a small resistance is a large conductance.

Ngspice can assign a resistor instance a different value for AC analysis, specified using the **`ac`** keyword. This value must not be zero as described above. The AC resistance is used in AC analysis only (not Pole-Zero nor noise). If you do not specify the **`ac`** parameter, it is defaulted to **`value`**. If you want to simulate temperature dependence of a resistor, you need to specify its temperature coefficients, using a `.model` line, like in the example below:

Example:

```
RE1  1  2  800  newres  dtemp=5

.MODEL  newres  R  tc1=0.001
```

Instance temperature is useful even if resistance does not varies with it, since the thermal noise generated by a resistor depends on its absolute temperature. Resistors in ngspice generates two different noises: thermal and flicker. While thermal noise is always generated in the resistor, to add a flicker noise[2] source you have to add a `.model` card defining the flicker noise parameters. It is possible to simulate resistors that do not generate any kind of noise using the **`noisy`** keyword and assigning zero to it, as in the following example:

Example:

```
Rmd  134  57  1.5k  noisy=0
```

Ngspice calculates the nominal resistance as described below:

[1] A negative resistor modeling an active element can cause convergence problems, please avoid it.
[2] Flicker noise can be used to model carbon resistors.

$$R_{nom} = \frac{\text{VALUE}*\text{scale}}{m}$$
$$R_{acnom} = \frac{\text{ac}*\text{scale}}{m} \tag{3.1}$$

If you are interested in temperature effects or noise equations, read the next section on semiconductor resistors.

3.2.2 Semiconductor Resistors

General form:

```
RXXXXXXX n+ n− <value> <mname> <l=length> <w=width> <temp=val>
+ <dtemp=val> m=<val> <ac=val> <scale=val> <noisy = 0|1>
```

Examples:

```
RLOAD 2 10 10K
RMOD 3 7 RMODEL L=10u W=1u
```

This is the more general form of the resistor presented before (3.2.1) and allows the modeling of temperature effects and for the calculation of the actual resistance value from strictly geometric information and the specifications of the process. If `value` is specified, it overrides the geometric information and defines the resistance. If `mname` is specified, then the resistance may be calculated from the process information in the model `mname` and the given `length` and `width`. If `value` is not specified, then `mname` and `length` must be specified. If `width` is not specified, then it is taken from the default width given in the model.

The (optional) `temp` value is the temperature at which this device is to operate, and overrides the temperature specification on the `.option` control line and the value specified in `dtemp`.

3.2.3 Semiconductor Resistor Model (R)

The resistor model consists of process-related device data that allow the resistance to be calculated from geometric information and to be corrected for temperature. The parameters available are:

Name	Parameter	Units	Default	Example
TC1	first order temperature coeff.	$\Omega/^\circ C$	0.0	-
TC2	second order temperature coeff.	$\Omega/^\circ C^2$	0.0	-
RSH	sheet resistance	$\Omega/\square$	-	50
DEFW	default width	m	1e-6	2e-6
NARROW	narrowing due to side etching	m	0.0	1e-7
SHORT	shortening due to side etching	m	0.0	1e-7
TNOM	parameter measurement temperature	$^\circ C$	27	50
KF	flicker noise coefficient		0.0	1e-25
AF	flicker noise exponent		0.0	1.0

The sheet resistance is used with the narrowing parameter and `l` and `w` from the resistor device to determine the nominal resistance by the formula:

$$R_{nom} = \text{rsh}\frac{l - \text{SHORT}}{w - \text{NARROW}} \tag{3.2}$$

`DEFW` is used to supply a default value for `w` if one is not specified for the device. If either `rsh` or `l` is not specified, then the standard default resistance value of 1 kOhm is used. `TNOM` is used to override the circuit-wide value given on the `.options` control line where the parameters of this model have been measured at a different temperature. After the nominal resistance is calculated, it is adjusted for temperature by the formula:

$$R(T) = R(\text{TNOM})\Big(1 + TC_1(T - \text{TNOM}) + TC_2(T - \text{TNOM})^2\Big) \tag{3.3}$$

where $R(\text{TNOM}) = R_{nom}|R_{acnom}$. In the above formula, "T" represents the instance temperature, which can be explicitly set using the `temp` keyword or calculated using the circuit temperature and `dtemp`, if present. If both `temp` and `dtemp` are specified, the latter is ignored. Ngspice improves spice's resistors noise model, adding flicker noise ($1/f$) to it and the `noisy` keyword to simulate noiseless resistors. The thermal noise in resistors is modeled according to the equation:

$$\bar{i_R^2} = \frac{4kT}{R}\Delta f \tag{3.4}$$

where "k" is the Boltzmann's constant, and "T" the instance temperature.

Flicker noise model is:

$$\bar{i_{Rfn}^2} = \frac{\text{KF}I_R^{\text{AF}}}{f}\Delta f \tag{3.5}$$

A small list of sheet resistances (in $\Omega/\square$) for conductors is shown below. The table represents typical values for MOS processes in the 0.5 - 1 um

range. The table is taken from: *N. Weste, K. Eshraghian - Principles of CMOS VLSI Design 2nd Edition, Addison Wesley*.

Material	Min.	Typ.	Max.
Inter-metal (metal1 - metal2)	0.005	0.007	0.1
Top-metal (metal3)	0.003	0.004	0.05
Polysilicon (poly)	15	20	30
Silicide	2	3	6
Diffusion (n+, p+)	10	25	100
Silicided diffusion	2	4	10
n-well	1000	2000	5000

3.2.4 Resistors, dependent on expressions (behavioral resistor)

General form:

```
RXXXXXXX n+ n- R = 'expression'
RXXXXXXX n+ n- 'expression'
```

Examples:

```
R1 rr 0 r = 'V(rr) < {Vt} ? {R0} : {2*R0}'
```

Expression may be an equation or an expression containing node voltages or branch currents (in the form of i(vm)) and any other terms as given for the B source and described in chapter 5.1. It may contain parameters (2.8.1). An example file is given below.

Example input file for non-linear resistor:

```
Non-linear resistor
.param R0=1k Vi=1 Vt=0.5
* resistor depending on control voltage V(rr)
R1 rr 0 r = 'V(rr) < {Vt} ? {R0} : {2*R0}'
* control voltage
V1 rr 0 PWL(0 0 100u {Vi})
.control
set noaskquit
tran 100n 100u uic
plot i(V1)
.endc
.end
```

3.2.5 Capacitors

General form:

```
CXXXXXXX n+ n- <value> <mname> <m=val> <scale=val> <temp=val>
+ <dtemp=val> <ic=init_condition>
```

Examples:

```
CBYP 13 0 1UF
COSC 17 23 10U IC=3V
```

Ngspice provides a detailed model for capacitors. Capacitors in the netlist can be specified giving their capacitance or their geometrical and physical characteristics. Following the original spice3 "convention", capacitors specified by their geometrical or physical characteristics are called "semiconductor capacitors" and are described in the next section.

In this first form `n+` and `n-` are the positive and negative element nodes, respectively and `value` is the capacitance in Farads.

Capacitance can be specified in the instance line as in the examples above or in a `.model` line, as in the example below:

```
C1 15 5 cstd
C2 2 7 cstd
.model cstd C cap=3n
```

Both capacitors have a capacitance of 3nF.

If you want to simulate temperature dependence of a capacitor, you need to specify its temperature coefficients, using a @command{.model} line, like in the example below:

```
CEB 1 2 1u cap1 dtemp=5
.MODEL cap1 C tc1=0.001
```

The (optional) initial condition is the initial (time zero) value of capacitor voltage (in Volts). Note that the initial conditions (if any) apply only if the `uic` option is specified on the `.tran` control line.

Ngspice calculates the nominal capacitance as described below:

$$C_{nom} = \text{value} * \text{scale} * m \tag{3.6}$$

3.2.6 Semiconductor Capacitors

General form:

```
CXXXXXXX n+ n- <value> <mname> <l=length> <w=width> <m=val>
+ <scale=val> <temp=val> <dtemp=val> <ic=init_condition>
```

Examples:

```
CLOAD 2 10 10P
CMOD 3 7 CMODEL L=10u W=1u
```

This is the more general form of the Capacitor presented in section (3.2.5), and allows for the calculation of the actual capacitance value from strictly geometric information and the specifications of the process. If `value` is specified, it defines the capacitance and both process and geometrical information are discarded. If `value` is not specified, the capacitance is calculated from information contained model `mname` and the given length and width (`l`, `w` keywords, respectively).

It is possible to specify `mname` only, without geometrical dimensions and set the capacitance in the `.model` line (3.2.5).

3.2.7 Semiconductor Capacitor Model (C)

The capacitor model contains process information that may be used to compute the capacitance from strictly geometric information.

Name	Parameter	Units	Default	Example
CAP	model capacitance	F	0.0	1e-6
CJ	junction bottom capacitance	F/m^2	-	5e-5
CJSW	junction sidewall capacitance	F/m	-	2e-11
DEFW	default device width	m	1e-6	2e-6
DEFL	default device length	m	0.0	1e-6
NARROW	narrowing due to side etching	m	0.0	1e-7
SHORT	shortening due to side etching	m	0.0	1e-7
TC1	first order temperature coeff.	$F/°C$	0.0	0.001
TC2	second order temperature coeff.	$F/°C^2$	0.0	0.0001
TNOM	parameter measurement temperature	$°C$	27	50
DI	relative dielectric constant	F/m	-	1
THICK	insulator thickness	m	0.0	1e-9

The capacitor has a capacitance computed as:

If `value` is specified on the instance line then

$$C_{nom} = \text{value} * \text{scale} * m \tag{3.7}$$

If model capacitance is specified then

$$C_{nom} = \text{CAP} * \text{scale} * m \tag{3.8}$$

If neither `value` nor `CAP` are specified, then geometrical and physical parameters are take into account:

$$\text{C}_0 = \text{CJ}(l - \text{SHORT})(w - \text{NARROW}) + 2\text{CJSW}(l - \text{SHORT} + w - \text{NARROW}) \tag{3.9}$$

`CJ` can be explicitly given on the `.model` line or calculated by physical parameters. When `CJ` is not given, is calculated as:

If `THICK` is not zero:

$$\begin{array}{ll} \text{CJ} = \frac{\text{DI}*\varepsilon_0}{\text{THICK}} & \text{if DI is specified,} \\ \text{CJ} = \frac{\varepsilon_{SiO_2}}{\text{THICK}} & \text{otherwise.} \end{array} \tag{3.10}$$

If the relative dielectric constant is not specified the one for SiO2 is used. The values of the constants are: $\varepsilon_0 = 8.854214871e-12\frac{F}{m}$ and $\varepsilon_{SiO_2} = 3.4531479969e-11\frac{F}{m}$. The nominal capacitance is then computed as:

$$C_{nom} = C_0 * \text{scale} * m \tag{3.11}$$

After the nominal capacitance is calculated, it is adjusted for temperature by the formula:

$$C(T) = C(\text{TNOM})\Big(1 + TC_1(T - \text{TNOM}) + TC_2(T - \text{TNOM})^2\Big) \tag{3.12}$$

where $C(\text{TNOM}) = C_{nom}$.

In the above formula, "T" represents the instance temperature, which can be explicitly set using the `temp` keyword or calculated using the circuit temperature and `dtemp`, if present.

3.2.8 Capacitors, dependent on expressions (behavioral capacitor)

General form:

```
CXXXXXXX n+ n- C = 'expression'
CXXXXXXX n+ n- 'expression'
```

Examples:

```
C1 cc 0 c = 'V(cc) < {Vt} ? {C1} : {Ch}'
```

Expression may be an equation or an expression containing node voltages or branch currents (in the form of i(vm)) and any other terms as given for the B source and described in chapter 5.1. It may contain parameters (2.8.1).

Example input file:

```
Behavioral Capacitor
.param Cl=5n Ch=1n Vt=1m Il=100n
.ic v(cc) = 0     v(cc2) = 0
* capacitor depending on control voltage V(cc)
C1 cc 0 c = 'V(cc) < {Vt} ? {Cl} : {Ch}'
*C1 cc 0 c ={Ch}
I1 0 1 {Il}
Exxx  n1-copy n2  n2 cc2  1
Cxxx  n1-copy n2  1
Bxxx  cc2 n2  I = '(V(cc2) < {Vt} ? {Cl} : {Ch})' * i(Exxx)
I2 n2 22 {Il}
vn2 n2 0 DC 0
* measure charge by integrating current
aint1 %id(1 cc) 2 time_count
aint2 %id(22 cc2) 3 time_count
.model time_count int(in_offset=0.0 gain=1.0
+ out_lower_limit=-1e12 out_upper_limit=1e12
+ limit_range=1e-9 out_ic=0.0)
.control
set noaskquit
tran 100n 100u
plot v(2)
plot v(cc) v(cc2)
.endc
.end
```

3.2.9 Inductors

General form:

```
LYYYYYYY n+ n- <value> <mname> <nt=val> <m=val> <scale=val> <temp=val>
+ <dtemp=val> <ic=init_condition>
```

Examples:

```
LLINK 42 69 1UH
LSHUNT 23 51 10U IC=15.7MA
```

The inductor device implemented into ngspice has many enhancements over the original one. `n+` and `n-` are the positive and negative element nodes, respectively. `value` is the inductance in Henry. Inductance can be specified in the instance line as in the examples above or in a `.model` line, as in the example below:

```
L1 15 5 indmod1
L2 2 7 indmod1
.model indmod1 L ind=3n
```

Both inductors have an inductance of 3nH.
The `nt` is used in conjunction with a `.model` line, and is used to specify the number of turns of the inductor. If you want to simulate temperature dependence of an inductor, you need to specify its temperature coefficients, using a `.model` line, like in the example below:

```
Lload 1 2 1u ind1 dtemp=5
.MODEL ind1 L tc1=0.001
```

The (optional) initial condition is the initial (time zero) value of inductor current (in Amps) that flows from `n+`, through the inductor, to `n-`. Note that the initial conditions (if any) apply only if the `UIC` option is specified on the `.tran` analysis line.

Ngspice calculates the nominal inductance as described below:

$$L_{nom} = \frac{\text{value} * \text{scale}}{m} \tag{3.13}$$

3.2.10 Inductor model

The inductor model contains physical and geometrical information that may be used to compute the inductance of some common topologies like solenoids and toroids, wound in air or other material with constant magnetic permeability.

Name	Parameter	Units	Default	Example
IND	model inductance	H	0.0	1e-3
CSECT	cross section	m^2	0.0	1e-3
LENGTH	length	m	0.0	1e-2
TC1	first order temperature coeff.	$H/°C$	0.0	0.001
TC2	second order temperature coeff.	$H/°C^2$	0.0	0.0001
TNOM	parameter measurement temperature	$°C$	27	50
NT	number of turns	-	0.0	10
MU	relative magnetic permeability	H/m	0.0	-

The inductor has an inductance computed as:

If `value` is specified on the instance line then

$$L_{nom} = \frac{\text{value} * \text{scale}}{m} \tag{3.14}$$

If model inductance is specified then

$$L_{nom} = \frac{\text{IND} * \text{scale}}{m} \tag{3.15}$$

If neither `value` nor `IND` are specified, then geometrical and physical parameters are take into account. In the following formulas

`NT` refers to both instance and model parameter (instance parameter overrides model parameter):

If `LENGTH` is not zero:

$$\begin{cases} L_{nom} = \frac{\text{MU}*\mu_0*\text{NT}^2*\text{CSECT}}{\text{LENGTH}} & \text{if MU is specified,} \\ L_{nom} = \frac{\mu_0*\text{NT}^2*\text{CSECT}}{\text{LENGTH}} & \text{otherwise.} \end{cases} \tag{3.16}$$

with:$\mu_0 = 1.25663706143592e-6\frac{H}{m}$. After the nominal inductance is calculated, it is adjusted for temperature by the formula:

$$L(T) = L(\text{TNOM})\Big(1 + TC_1(T - \text{TNOM}) + TC_2(T - \text{TNOM})^2\Big) \tag{3.17}$$

where $L(\text{TNOM}) = L_{nom}$. In the above formula, "T" represents the instance temperature, which can be explicitly using the `temp` keyword or calculated using the circuit temperature and `dtemp`, if present.

3.2.11 Coupled (Mutual) Inductors

General form:

```
KXXXXXXX LYYYYYYY LZZZZZZZ value
```

Examples:

```
K43 LAA LBB 0.999
KXFRMR L1 L2 0.87
```

LYYYYYYY and LZZZZZZZ are the names of the two coupled inductors, and `value` is the coefficient of coupling, K, which must be greater than 0 and less than or equal to 1. Using the "dot" convention, place a "dot" on the first node of each inductor.

3.2.12 Inductors, dependent on expressions (behavioral inductor)

General form:

```
LXXXXXXX n+ n- L = 'expression'
LXXXXXXX n+ n- 'expression'
```

Examples:

```
L1 l2 lll L = 'i(Vm) < {It} ? {Ll} : {Lh}'
```

Expression may be an equation or an expression containing node voltages or branch currents (in the form of i(vm)) and any other terms as given for the B source and described in chapter 5.1. It may contain parameters (2.8.1).

Example input file:

```
Variable inductor
.param Ll=0.5m Lh=5m It=50u Vi=2m
.ic v(int21) = 0

* variable inductor depending on control current i(Vm)
L1 l2 lll L = 'i(Vm) < {It} ? {Ll} : {Lh}'
* measure current through inductor
vm lll 0 dc 0
* voltage on inductor
V1 l2 0 {Vi}

* fixed inductor
L3 33 331 {Ll}
* measure current through inductor
vm33 331 0 dc 0
* voltage on inductor
V3 33 0 {Vi}

* non linear inductor (discrete setup)
F21 int21 0 B21 -1
L21 int21 0 1
B21 n1 n2 V = '(i(Vm21) < {It} ? {Ll} : {Lh})' * v(int21)
* measure current through inductor
vm21 n2 0 dc 0
V21 n1 0 {Vi}

.control
set noaskquit
tran 1u 100u uic
plot i(Vm) i(vm33)
plot i(vm21) i(vm33)
plot i(vm)-i(vm21)
.endc
.end
```

3.2.13 Capacitor or inductor with initial conditions

The simulator supports the specification of voltage and current initial conditions on capacitor and inductor models, respectively. **These models are not the standard ones supplied with SPICE3, but are in fact code models which can be substituted for the SPICE models when realistic initial conditions are required**. For details please refer to chapt. 12. A XSPICE deck example using these models is shown below:

```
*
* This circuit contains a capacitor and an inductor with
* initial conditions on them. Each of the components
```

```
* has a parallel resistor so that an exponential decay
* of the initial condition occurs with a time constant of
* 1 second.
*
a1 1 0 cap
.model cap capacitor (c=1000uf ic=1)
r1 1 0 1k
*
a2 2 0 ind
.model ind inductor (l=1H ic=1)
r2 2 0 1.0
*
.control
tran 0.01 3
plot v(1) v(2)
.endc
.end
```

3.2.14 Switches

Two types of switches are available: a voltage controlled switch (type SXXXXXX, model SW) and a current controlled switch (type WXXXXXXX, model CSW). A switching hysteresis may be defined, as well as on- and off-resistances ($0 < R < \infty$).

General form:

SXXXXXXX N+ N– NC+ NC– MODEL <ON><OFF>
WYYYYYYY N+ N– VNAM MODEL <ON><OFF>

Examples:

```
s1 1 2 3 4 switch1 ON
s2 5 6 3 0 sm2 off
Switch1 1 2 10 0 smodel1
w1 1 2 vclock switchmod1
W2 3 0 vramp sm1 ON
wreset 5 6 vclck lossyswitch OFF
```

Nodes 1 and 2 are the nodes between which the switch terminals are connected. The model name is mandatory while the initial conditions are optional. For the voltage controlled switch, nodes 3 and 4 are the positive and negative controlling nodes respectively. For the current controlled switch, the controlling current is that through the specified voltage source. The direction of positive controlling current flow is from the positive node, through the source, to the negative node.

The instance parameters ON or OFF are required, when the controlling voltage (current) starts inside the range of the hysteresis loop (different outputs during forward vs. backward voltage or current ramp). Then ON or OFF determine the initial state of the switch.

3.2.15 Switch Model (SW/CSW)

The switch model allows an almost ideal switch to be described in ngspice. The switch is not quite ideal, in that the resistance can not change from 0 to infinity, but must always have a finite positive value. By proper selection of the on and off resistances, they can be effectively zero and infinity in comparison to other circuit elements. The parameters available are:

Name	Parameter	Units	Default	Switch model
VT	threshold voltage	V	0.0	SW
IT	threshold current	A	0.0	CSW
VH	hysteresis voltage	V	0.0	SW
IH	hysteresis current	A	0.0	CSW
RON	on resistance	Ω	1.0	SW,CSW
ROFF	off resistance	Ω	1.0e+12 (*)	SW,CSW

(*) Or $1/GMIN$, if you have set *GMIN* to any other value, see the `.OPTIONS` control line (15.1.2) for a description of *GMIN*, its default value results in an off-resistance of 1.0e+12 ohms.

The use of an ideal element that is highly nonlinear such as a switch can cause large discontinuities to occur in the circuit node voltages. A rapid change such as that associated with a switch changing state can cause numerical round-off or tolerance problems leading to erroneous results or time step difficulties. The user of switches can improve the situation by taking the following steps:

- First, it is wise to set ideal switch impedances just high or low enough to be negligible with respect to other circuit elements. Using switch impedances that are close to "ideal" in all cases aggravates the problem of discontinuities mentioned above. Of course, when modeling real devices such as MOSFETS, the on resistance should be adjusted to a realistic level depending on the size of the device being modeled.

- If a wide range of ON to OFF resistance must be used in the switches (ROFF/RON >1e+12), then the tolerance on errors allowed during transient analysis should be decreased by using the `.OPTIONS` control line and specifying `TRTOL` to be less than the default value of 7.0.

- When switches are placed around capacitors, then the option `CHGTOL` should also be reduced. Suggested values for these two options are 1.0 and 1e-16 respectively. These changes inform ngspice to be more careful around the switch points so that no errors are made due to the rapid change in the circuit.

Example input file:

```
Switch test
.tran 2us 5ms
*switch control voltage
v1 1 0 DC 0.0 PWL(0 0 2e-3 2 4e-3 0)
*switch control voltage starting inside hysteresis window
*please note influence of instance parameters ON, OFF
v2 2 0 DC 0.0 PWL(0 0.9 2e-3 2 4e-3 0.4)
*switch control current
i3 3 0 DC 0.0 PWL(0 0 2e-3 2m 4e-3 0) $ <--- switch control current
*load voltage
v4 4 0 DC 2.0
*input load for current source i3
r3 3 33 10k
vm3 33 0 dc 0 $ <--- measure the current
* ouput load resistors
r10 4 10 10k
r20 4 20 10k
r30 4 30 10k
r40 4 40 10k
*
s1 10 0 1 0 switch1 OFF
s2 20 0 2 0 switch1 OFF
s3 30 0 2 0 switch1 ON
.model switch1 sw vt=1 vh=0.2 ron=1 roff=10k
*
w1 40 0 vm3 wswitch1 off
.model wswitch1 csw  it=1m ih=0.2m ron=1 roff=10k
*
.control
run
plot v(1) v(10)
plot v(10) vs v(1) $ <-- get hysteresis loop
plot v(2) v(20) $ <--- different initial values
plot v(20) vs v(2) $ <-- get hysteresis loop
plot v(2) v(30) $ <--- different initial values
plot v(30) vs v(2) $ <-- get hysteresis loop
plot v(40) vs vm3#branch $ <--- current controlled switch hysteresis
.endc
.end
```

Chapter 4

Voltage and Current Sources

4.1 Independent Sources for Voltage or Current

General form:

```
VXXXXXXX N+ N- <<DC> DC/TRAN VALUE> <AC <ACMAG <ACPHASE>>>
+ <DISTOF1 <F1MAG <F1PHASE>>> <DISTOF2 <F2MAG <F2PHASE>>>
IYYYYYYY N+ N- <<DC> DC/TRAN VALUE> <AC <ACMAG <ACPHASE>>>
+ <DISTOF1 <F1MAG <F1PHASE>>> <DISTOF2 <F2MAG <F2PHASE>>>
```

Examples:

```
VCC 10 0 DC 6
VIN 13 2 0.001 AC 1 SIN(0 1 1MEG)
ISRC 23 21 AC 0.333 45.0 SFFM(0 1 10K 5 1K)
VMEAS 12 9
VCARRIER 1 0 DISTOF1 0.1 -90.0
VMODULATOR 2 0 DISTOF2 0.01
IIN1 1 5 AC 1 DISTOF1 DISTOF2 0.001
```

`n+` and `n-` are the positive and negative nodes, respectively. Note that voltage sources need not be grounded. Positive current is assumed to flow from the positive node, through the source, to the negative node. A current source of positive value forces current to flow out of the `n+` node, through the source, and into the `n-` node. Voltage sources, in addition to being used for circuit excitation, are the "ammeters" for ngspice, that is, zero valued voltage sources may be inserted into the circuit for the purpose of measuring current. They of course have no effect on circuit operation since they represent short-circuits.

`DC/TRAN` is the dc and transient analysis value of the source. If the source value is zero both for dc and transient analyses, this value may be omitted. If the source value is time-invariant (e.g., a power supply), then the value may optionally be preceded by the letters DC.

`ACMAG` is the ac magnitude and `ACPHASE` is the ac phase. The source is set to this value in the ac analysis. If `ACMAG` is omitted following the keyword `AC`, a value of unity is assumed. If `ACPHASE` is omitted, a value of zero is assumed. If the source is not an ac small-signal input, the keyword `AC` and the ac values are omitted.

`DISTOF1` and `DISTOF2` are the keywords that specify that the independent source has distortion inputs at the frequencies `F1` and `F2` respectively (see the description of the `.DISTO` control line).

The keywords may be followed by an optional magnitude and phase. The default values of the magnitude and phase are 1.0 and 0.0 respectively.

Any independent source can be assigned a time-dependent value for transient analysis. If a source is assigned a time-dependent value, the time-zero value is used for dc analysis. There are eight independent source functions:

- pulse,
- exponential,
- sinusoidal,
- piece-wise linear,
- single-frequency FM
- AM
- transient noise
- and random voltages or currents.

If parameters other than source values are omitted or set to zero, the default values shown are assumed. (`TSTEP` is the printing increment and `TSTOP` is the final time (see the `.TRAN` control line for explanation)).

4.1.1 Pulse

General form:

PULSE(V1 V2 TD TR TF PW PER)

Examples:

VIN 3 0 PULSE(−1 1 2NS 2NS 2NS 50NS 100NS)

Name	Parameter	Default Value	Units
V1	Initial value	-	V, A
V2	Pulsed value	-	V, A
TD	Delay time	0.0	sec
TR	Rise time	TSTEP	sec
TF	Fall time	TSTEP	sec
PW	Pulse width	TSTOP	sec
PER	Period	TSTOP	sec

A single pulse so specified is described by the following table:

Time	Value
0	V1
TD	V1
TD+TR	V2
TD+TR+PW	V2
TD+TR+PW+TF	V1
TSTOP	V1

Intermediate points are determined by linear interpolation.

4.1.2 Sinusoidal

General form:

SIN(VO VA FREQ TD THETA)

Examples:

VIN 3 0 SIN(0 1 100MEG 1NS 1E10)

Name	Parameter	Default Value	Units
VO	Offset	-	V, A
VA	Amplitude	-	V, A
FREQ	Frequency	$1/TSTOP$	Hz
TD	Delay	0.0	sec
THETA	Damping factor	0.0	$1/sec$

The shape of the waveform is described by the following formula:

$$V(t) = \begin{cases} V0 & \text{if } 0 \leq \text{t} < TD \\ V0 + VA\text{e}^{-(t-TD)THETA} \sin(2\pi FREQ(t-TD)) & \text{if } TD \leq t < TSTOP \end{cases} \tag{4.1}$$

4.1.3 Exponential

General Form:

EXP(V1 V2 TD1 TAU1 TD2 TAU2)

Examples:

VIN 3 0 EXP(−4 −1 2NS 30NS 60NS 40NS)

Name	Parameter	Default Value	Units
V1	Initial value	-	V, A
V2	pulsed value	-	V, A
TD1	rise delay time	0.0	sec
TAU1	rise time constant	TSTEP	sec
TD2	fall delay time	TD1+TSTEP	sec
TAU2	fall time constant	TSTEP	sec

The shape of the waveform is described by the following formula:

Let $V21 = V2 - V1$ $V12 = V1 - V2$:

$$V(t) = \begin{cases} V1 & \text{if } 0 \leq t < TD1, \\ V1 + V21\left(1 - e^{-\frac{(t-TD1)}{TAU1}}\right) & \text{if } TD1 \leq t < TD2, \\ V1 + V21\left(1 - e^{-\frac{(t-TD1)}{TAU1}}\right) + V12\left(1 - e^{-\frac{(t-TD2)}{TAU2}}\right) & \text{if } TD2 \leq t < TSTOP. \end{cases} \tag{4.2}$$

4.1.4 Piece-Wise Linear

General Form:

```
PWL(T1 V1 <T2 V2 T3 V3 T4 V4 ...>) <r=value> <td=value>
```

Examples:

```
VCLOCK 7 5 PWL(0 -7 10NS -7 11NS -3 17NS -3 18NS -7 50NS -7) r=0 td=15NS
```

Each pair of values (T_i, V_i) specifies that the value of the source is V_i (in Volts or Amps) at time = T_i. The value of the source at intermediate values of time is determined by using linear interpolation on the input values. The parameter r determines a repeat time point. If r is not given, the whole sequence of values (T_i, V_i) is issued once, then the output stays at its final value. If *r = 0*, the whole sequence from *time = 0* to *time = Tn* is repeated forever. If *r = 10ns*, the sequence between 10ns and 50ns is repeated forever. the r value has to be one of the time points T1 to Tn of the PWL sequence. If td is given, the whole PWL sequence is delayed by a delay time *time = td*. The current source still needs to be patched, td and r are not yet available.

4.1.5 Single-Frequency FM

General Form:

```
SFFM(VO VA FC MDI FS)
```

Examples:

```
V1 12 0 SFFM(0 1M 20K 5 1K)
```

Name	Parameter	Default value	Units
VO	Offset	-	V, A
VA	Amplitude	-	V, A
FC	Carrier frequency	$1/TSTOP$	Hz
MDI	Modulation index	-	
FS	Signal frequency	$1/TSTOP$	Hz

The shape of the waveform is described by the following equation:

$$V(t) = V_O + V_A \sin(2\pi FCt + MDI \sin(2\pi FSt)) \tag{4.3}$$

4.1.6 Amplitude modulated source (AM)

General Form:

```
AM(VA VO MF FC TD)
```

Examples:

```
V1 12 0 AM(0.5 1 20K 5MEG 1m)
```

Name	Parameter	Default value	Units
VA	Amplitude	-	V, A
VO	Offset	-	V, A
MF	Modulating frequency	-	Hz
FC	Carrier frequency	$1/TSTOP$	Hz
TD	Signal delay	-	s

The shape of the waveform is described by the following equation:

$$V(t) = V_A * (VO + \sin(2\pi MFt)) * \sin(2\pi FCt) \tag{4.4}$$

4.1.7 Transient noise source

General Form:

TRNOISE(NA NT NALPHA NAMP RTSAM RTSCAPT RTSEMT)

Examples:

```
VNoiw 1 0 DC 0 TRNOISE(20n 0.5n 0 0)        $ white
VNoi1of 1 0 DC 0 TRNOISE(0 10p 1.1 12p)     $ 1/f
VNoiw1of 1 0 DC 0 TRNOISE(20 10p 1.1 12p) $ white and 1/f
IALL 10 0 DC 0 trnoise(1m 1u 1.0 0.1m 15m 22u 50u) $ white, 1/f, RTS
```

Transient noise is an experimental feature allowing (low frequency) transient noise injection and analysis. See chapter 15.3.10 for a detailed description. NA is the Gaussian noise rms voltage amplitude, NT is the time between sample values (breakpoints will be enforced on multiples of this value). NALPHA (exponent to the frequency dependency), NAMP (rms voltage or current amplitude) are the parameters for 1/f noise, RTSAM the random telegraph signal amplitude, RTSCAPT the mean of the exponential distribution of the trap capture time, and RTSEMT its emission time mean. White Gaussian, 1/f, and RTS noise may be combined into a single statement.

Name	Parameter	Default value	Units
NA	Rms noise amplitude (Gaussian)	-	V, A
NT	Time step	-	sec
NALPHA	1/f exponent	$0 < \alpha < 2$	-
NAMP	Amplitude (1/f)	-	V, A
RTSAM	Amplitude	-	V, A
RTSCAPT	Trap capture time	-	sec
RTSEMT	Trap emission time	-	sec

If you set NT and RTSAM to 0, the noise option TRNOISE ... is ignored. Thus you may switch off the noise contribution of an individual voltage source VNOI by the command

```
alter @vnoi[trnoise] = [ 0 0 0 0 ] $ no noise
```

```
alter @vrts[trnoise] = [ 0 0 0 0 0 0 0] $ no noise
```

See chapt. 17.5.3 for the alter command.

You may switch off all TRNOISE noise sources by setting

```
set notrnoise
```

to your .spiceinit file (for all your simulations) or into your control section in front of the next run or tran command (for this specific and all following simulations). The command

```
unset notrnoise
```

will reinstate all noise sources.

The noise generators are implemented into the independent **voltage** (vsrc) and **current** (isrc) sources.

4.1.8 Random voltage source

The TRRANDOM option yields statistically distributed voltage values, derived from the ngspice random number generator. These values may be used in the transient simulation directly within a circuit, e.g. for generating a specific noise voltage, but especially they may be used in the control of behavioral sources (B, E, G sources 5, voltage controllable A sources 12, capacitors 3.2.8, inductors 3.2.12, or resistors 3.2.4) to simulate the circuit dependence on statistically varying device parameters. A Monte-Carlo simulation may thus be handled in a single simulation run.

General Form:

TRRANDOM(TYPE TS <TD <PARAM1 <PARAM2>>>)

Examples:

```
VR1 r1 0 dc 0 trrandom (2 10m 0 1) $ Gaussian
```

TYPE determines the random variates generated: 1 is uniformly distributed, 2 Gaussian, 3 exponential, 4 Poisson. TS is the duration of an individual voltage value. TD is a time delay with 0 V output before the random volage values start up. PARAM1 and PARAM2 depend on the type selected.

TYPE	description		PARAM1	default		PARAM2	default
1	Uniform		Range	1		Offset	0
2	Gaussian		Standard Dev.	1		Mean	0
3	Exponential		Mean	1		Offset	0
4	Poisson		Lambda	1		Offset	0

4.1.9 Arbitrary Phase Sources

The XSPICE option supports arbitrary phase independent sources that output at TIME=0.0 a value corresponding to some specified phase shift. Other versions of SPICE use the TD (delay time) parameter to set phase-shifted sources to their time-zero value until the delay time has elapsed. The XSPICE phase parameter is specified in degrees and is included after the SPICE3 parameters normally used to specify an independent source. Partial XSPICE deck examples of usage for pulse and sine waveforms are shown below:

```
* Phase shift is specified after Berkeley defined parameters
* on the independent source cards. Phase shift for both of the
* following is specified as +45 degrees
*
```

```
v1 1 0 0.0 sin(0 1 1k 0 0 45.0)
r1 1 0 1k
*
v2 2 0 0.0 pulse(-1 1 0 1e-5 1e-5 5e-4 1e-3 45.0)
r2 2 0 1k
*
```

4.2 Linear Dependent Sources

Ngspice allows circuits to contain linear dependent sources characterized by any of the four equations

$i = gv$	$v = ev$	$i = fi$	$v = hi$

where g, e, f, and h are constants representing transconductance, voltage gain, current gain, and transresistance, respectively. Non-linear dependent sources for voltages or currents (B, E, G) are described in chapter 5.

4.2.1 Linear Voltage-Controlled Current Sources (VCCS)

General form:

GXXXXXXX N+ N– NC+ NC– VALUE

Examples:

G1 2 0 5 0 0.1MMHO

n+ and **n-** are the positive and negative nodes, respectively. Current flow is from the positive node, through the source, to the negative

node. **nc+** and **nc-** are the positive and negative controlling nodes, respectively. **value** is the transconductance (in mhos).

4.2.2 Linear Voltage-Controlled Voltage Sources (VCVS)

General form:

EXXXXXXX N+ N– NC+ NC– VALUE

Examples:

E1 2 3 14 1 2.0

n+ is the positive node, and **n-** is the negative node. **nc+** and **nc-** are the positive and negative controlling nodes, respectively. **value** is the

voltage gain.

Dependent Polynomial Sources	
Source Type	Instance Card
POLYNOMIAL VCVS	EXXXXXXX N+ N- (POLY (ND)) NC1+ NC1- P0 (P1...)
POLYNOMIAL VCCS	GXXXXXXX N+ N- (POLY (ND)) NC1+ NC1- P0 (P1...)
POLYNOMIAL CCCS	FXXXXXXX N+ N- (POLY (ND)) VNAM1 !VNAM2...? P0 (P1...)
POLYNOMIAL CCVS	HXXXXXXX N+ N- (POLY (ND)) VNAM1 !VNAM2...? P0 (P1...)

Table 4.1: Dependent Polynomial Sources

4.2.3 Linear Current-Controlled Current Sources (CCCS)

General form:

FXXXXXXX N+ N– VNAM VALUE

Examples:

```
F1 13 5 VSENS 5
```

n+ and **n-** are the positive and negative nodes, respectively. Current flow is from the positive node, through the source, to the negative node. **vnam** is the name of a voltage source through which the controlling current flows. The direction of positive controlling current flow is from the positive node, through the source, to the negative node of **vnam**. **value** is the current gain.

4.2.4 Linear Current-Controlled Voltage Sources (CCVS)

General form:

HXXXXXXX n+ n– vnam value

Examples:

```
HX 5 17 VZ 0.5K
```

n+ and **n-** are the positive and negative nodes, respectively. **vnam** is the name of a voltage source through which the controlling current flows. The direction of positive controlling current flow is from the positive node, through the source, to the negative node of **vnam**. **value** is the transresistance (in ohms).

4.2.5 Polynomial Source Compatibility

Dependent polynomial sources available in SPICE2G6 are fully supported in ngspice using the XSPICE extension. Dependent polynomial sources are not supported in SPICE3 but were reinstated in XSPICE to allow existing third party models to be incorporated readily into XSPICE. The form used to specify these sources is shown in Table 4.1.

Chapter 5

Non-linear Dependent Sources (Behavioral Sources)

The non-linear dependent sources B (see chapt. 5.1), E (see 5.2), G see (5.3) described in this chapter allow to generate voltages or currents which result from evaluating a mathematical expression. Internally E and G sources are converted to the more general B source. All three sources may be used to introduce behavioral modeling and analysis.

5.1 B source (ASRC)

5.1.1 Syntax and usage

General form:

```
BXXXXXXX n+ n- <i=expr> <v=expr>
```

Examples:

```
B1 0 1 I=cos(v(1))+sin(v(2))
B2 0 1 V=ln(cos(log(v(1,2)^2)))-v(3)^4+v(2)^v(1)
B3 3 4 I=17
B4 3 4 V=exp(pi^i(vdd))
B5 2 0 V = V(1) < {Vlow} ? {Vlow} : V(1) > {Vhigh} ? {Vhigh} : V(1)
```

`n+` is the positive node, and `n-` is the negative node. The values of the `V` and `I` parameters determine the voltages and currents across and through the device, respectively. If `I` is given then the device is a current source, and if `V` is given the device is a voltage source. One and only one of these parameters must be given.

The small-signal AC behavior of the nonlinear source is a linear dependent source (or sources) with a proportionality constant equal to the derivative (or derivatives) of the source at the DC operating point. The expressions given for `V` and `I` may be any function of voltages and currents through voltage sources in the system. In addition, the variables **'time'** and **'temper'** are available in a transient analysis, reflecting the actual simulation time and circuit temperature. The variable **'hertz'** is available in an AC analysis. **'time'** is zero in the AC analysis, **'hertz'** is zero during transient analysis. Using the variable **'hertz'** may cost some CPU time if you

have a large circuit, because for each frequency the operating point has to be determined before calculating the AC response.

The following functions of a single real variable are defined:

Trigonometric functions: cos, sin, tan, acos, asin, atan

Hyperbolic functions: cosh, sinh, acosh, asinh, atanh

Exponential and logarithmic: exp, ln, log

Other: abs, sqrt, u, u2, uramp, floor, ceil

Functions of two variables are: min, max, pow

Functions of three variables are: a ? b:c

The function “u” is the unit step function, with a value of one for arguments greater than zero and a value of zero for arguments less than zero. The function “u2” returns a value of zero for arguments less than zero, one for arguments greater than one and assumes the value of the argument between these limits. The function "uramp" is the integral of the unit step: for an input x, the value is zero if x is less than zero, or if x is greater than zero the value is x. These three functions are useful in synthesizing piece-wise non-linear functions, though convergence may be adversely affected.

The following standard operators are defined: +, -, *, /, ^, unary -

Logical operators are !=, <>, >=, <=, ==, >, <, ||, &&, ! .

A ternary function is defined as `a ? b : c`, which means `IF a, THEN b, ELSE c`. Be sure to place a space in front of ’?’ to allow the parser distinguishing it from other tokens.

Example: Ternary function

```
* B source test Clamped voltage source
* C. P. Basso "Switched-mode power supplies", New York, 2008
.param Vhigh = 4.6
.param Vlow = 0.4
Vin1 1 0 DC 0 PWL(0 0 1u 5)
Bcl 2 0 V = V(1) < Vlow ? Vlow : V(1) > Vhigh ? Vhigh : V(1)
.control
set noaskquit
tran 5n 1u
plot V(2) vs V(1)
.endc
.end
```

If the argument of log, ln, or sqrt becomes less than zero, the absolute value of the argument is used. If a divisor becomes zero or the argument of log or ln becomes zero, an error will result. Other problems may occur when the argument for a function in a partial derivative enters a region where that function is undefined.

Parameters may be used like {Vlow} shown in the example above. Parameters will be evaluated upon set up of the circuit, vectors like V(1) will be evaluated during the simulation.

To get time into the expression you can integrate the current from a constant current source with a capacitor and use the resulting voltage (don't forget to set the initial voltage across the capacitor).

Non-linear resistors, capacitors, and inductors may be synthesized with the nonlinear dependent source. Nonlinear resistors, capacitors and inductors are implemented with their linear counterparts by a change of variables implemented with the nonlinear dependent source. The following subcircuit will implement a nonlinear capacitor:

Example: Non linear capacitor

```
.Subckt nlcap pos neg
* Bx: calculate f(input voltage)
Bx 1 0 v = f(v(pos,neg))
* Cx: linear capacitance
Cx 2 0 1
* Vx: Ammeter to measure current into the capacitor
Vx 2 1 DC 0Volts
* Drive the current through Cx back into the circuit
Fx pos neg Vx 1
.ends
```

Example for f(v(pos,neg)):

```
Bx 1 0 V = v(pos,neg)*v(pos,neg)
```

Non-linear resistors or inductors may be described in a similar manner. An example for a nonlinear resistor using this template is shown below.

Example: Non linear resistor

```
* use of 'hertz' variable in nonlinear resistor
*.param rbase=1k
* some tests
B1  1 0  V = hertz*v(33)
B2  2 0 V = v(33)*hertz
b3  3 0 V = 6.283e3/(hertz+6.283e3)*v(33)
V1 33 0 DC 0 AC 1
*** Translate R1 10 0 R='1k/sqrt(HERTZ)' to B source ***
.Subckt nlres pos neg rb=rbase
* Bx: calculate f(input voltage)
Bx   1    0    v = -1 / {rb} / sqrt(HERTZ) * v(pos, neg)
* Rx: linear resistance
Rx   2    0    1
```

Example: Non linear resistor (continued)

```
* Vx: Ammeter to measure current into the resistor
Vx    2     1     DC 0Volts
* Drive the current through Rx back into the circuit
Fx    pos   neg   Vx 1
.ends
Xres 33 10 nlres rb=1k
*Rres 33 10 1k
Vres 10 0 DC 0
.control
define check(a,b) vecmax(abs(a - b))
ac lin 10 100 1k
* some checks
print v(1) v(2) v(3)
if check(v(1), frequency) < 1e-12
echo "INFO: ok"
end
plot vres#branch
.endc
.end
```

5.1.2 par('expression')

The B source syntax may also be used in output lines like `.plot` as algebraic expressions for output (see chapt.15.5.6).

5.1.3 Piecewise Linear Function: pwl

Both B source types may contain a piece-wise linear dependency of one network variable:

Example: pwl_current

```
Bdio 1 0 I = pwl(v(A), 0,0, 33,10m, 100,33m, 200,50m)
```

v(A) is the independent variable x. Each pair of values following describes the x,y functional relation: In this example at node A voltage of 0V the current of 0A is generated - next pair gives 10mA flowing from ground to node 1 at 33V on node A and so forth.

The same is possible for voltage sources:

Example: pwl_voltage

```
Blimit b 0 V = pwl(v(1), -4,0, -2,2, 2,4, 4,5, 6,5)
```

Monotony of the independent variable in the pwl definition is checked - non-monotonic x entries will stop the program execution. v(1) may be replaced by a controlling current source. v(1) may also be replaced by an expression, e.g. -2*i(Vin). The value pairs may also be parameters, which have to be defined before by a `.param` statement. An example for the pwl function using all of these options is shown below:

Example: pwl function in B source

```
Demonstrates usage of the pwl function in an B source (ASRC)
* Also emulates the TABLE function with limits

.param x0=-4 y0=0
.param x1=-2 y1=2
.param x2=2 y2=-2
.param x3=4 y3=1
.param xx0=x0-1
.param xx3=x3+1

Vin   1 0   DC=0V
R 1 0 2

* no limits outside of the tabulated x values (continues linearily)
Btest2 2 0   I = pwl(v(1), 'x0','y0', 'x1','y1', 'x2','y2', 'x3','y3')

* like TABLE function with limits:
Btest3 3 0   I = (v(1) < 'x0') ? 'y0' :  (v(1) < 'x3') ?
+ pwl(v(1), 'x0','y0', 'x1','y1', 'x2','y2', 'x3','y3') : 'y3'

* more efficient and elegant TABLE function with limits
*(voltage controlled):
Btest4 4 0   I = pwl(v(1),
+ 'xx0','y0', 'x0','y0',
+              'x1','y1',
+              'x2','y2',
+              'x3','y3', 'xx3','y3')
*
* more efficient and elegant TABLE function with limits
* (controlled by current):
Btest5 5 0   I = pwl(-2*i(Vin),
+ 'xx0','y0', 'x0','y0',
+              'x1','y1',
+              'x2','y2',
+              'x3','y3', 'xx3','y3')

Rint2 2 0 1
Rint3 3 0 1
Rint4 4 0 1
Rint5 5 0 1
.control
dc  Vin  -6 6  0.2
plot v(2) v(3) v(4)-0.5 v(5)+0.5
.endc

.end
```

5.2 E source (non-linear voltage source)*

5.2.1 VOL

General form:

```
EXXXXXXX n+ n- vol='expr'
```

Examples:

```
E41 4 0 vol = 'V(3)*V(3)-Offs'
```

Expression may be an equation or an expression containing node voltages or branch currents (in the form of i(vm)) and any other terms as given for the B source and described in chapter 5.1. It may contain parameters (2.8.1). ' or {, } may be used to delimit the function.

5.2.2 VALUE

Optional syntax:

```
EXXXXXXX n+ n- value={expr}
```

Examples:

```
E41 4 0 value = {V(3)*V(3)-Offs}
```

5.2.3 TABLE

Data may be entered from the listings of a data table similar to the pwl B-Source (5.1.3). Data are grouped into x, y pairs. **Expression** may be an equation or an expression containing node voltages or branch currents (in the form of i(vm)) and any other terms as given for the B source and described in chapter 5.1. It may contain parameters (2.8.1). ' or {, } may be used to delimit the function. **Expression** delivers the x-value, which is used to generate a corresponding y-value, according to the tabulated value pairs, using linear interpolation. If the x-value is below x0 , y0 is returned, above x2 y2 is returned (limiting function). The value pairs have to be real numbers, parameters are **not** allowed!

Syntax for data entry from table:

```
Exxx n1 n2 TABLE {expression} = (x0, y0) (x1, y1) (x2, y2)
```

Example (simple comparator):

```
ECMP 11 0 TABLE {V(10,9)} = (-5MV, 0V) (5MV, 5V)
```

5.2.4 POLY

General form:

```
EXXXX N+ N- (POLY (ND)) NC1+ NC1- (NC2+ NC2-...) P0 (P1...)
```

Example:

```
ENONLIN 100 101 POLY(2) 3 0 4 0 0.0 13.6 0.2 0.005
```

POLY(ND) Specifies the number of dimensions of the polynomial. The number of pairs of controlling nodes must be equal to the number of dimensions.

(N+) and (N-) nodes are output nodes. Positive current flows from the (+) node through the source to the (-) node.

The <NC1+> and <NC1-> are in pairs and define a set of controlling voltages. A particular node can appear more than once, and the output and controlling nodes need not be different.

The example yields a voltage output controlled by two input voltages v(3,0) and v(4,0). Four polynomal coefficients are given. The equivalent function to generate the output is:

```
0 + 13.6 * v(3) + 0.2 * v(4) + 0.005 * v(3) * v(3)
```

Generally you will set the equation according to

```
POLY(1) y = p0 + k1*X1  + p2*X1*X1    + p3*X1*X1*X1 + ...
POLY(2) y = p0 + p1*X1         + p2*X2 +
               + p3*X1*X1      + p4*X2*X1    + p5*X2*X2    +
               + p6*X1*X1*X1   + p7*X2*X1*X1 + p8*X2*X2*X1 +
               + p9*X2*X2*X2   + ...
POLY(3) y = p0 + p1*X1    + p2*X2    + p3*X3    +
               + p4*X1*X1 + p5*X2*X1 + p6*X3*X1 +
               + p7*X2*X2 + p8*X2*X3 + p9*X3*X3 + ...
```

where X1 is the voltage difference of the first input node pair, X2 of the second pair and so on. Keeping track of all polynomal coefficient obviously becomes rather tedious for larger polynomals.

5.2.5 LAPLACE

Currently ngspice does not offer a direct E-Source element with the LAPLACE option. There is however, a XSPICE code model equivalent called **x_fer** (see chapt. 12.2.16), which you may invoke manually. The XSPICE option has to enabled (31.1). AC (15.3.1) and transient analysis (15.3.9) is supported.

The following E-Source:

```
ELOPASS 4 0 LAPLACE {V(1)} {10 / (s/6800 + 1)}
```

may be replaced by:

```
AELOPASS 1 int_4 filter1
.model filter1 x_fer(gain=10 int_ic=[0 0] num_coeff=[1]
+                    den_coeff=[1 1.47e-4]
ELOPASS 4 0 int_4 0 1
```

where you have the voltage of node 1 as input, an intermediate output node int_4 and an E-source as buffer, so to keep the name 'ELOPASS' available if further processing is required.

If the controlling expression is more complex than just a voltage node, you may add a B-Source (5.1) for evaluating the expression before enmtering the A-device.

E-Source with complex controlling expression:

```
ELOPASS 4 0 LAPLACE {V(1)*v(2)} {10 / (s/6800 + 1)}
```

may be replaced by:

```
BELOPASS int_1 0 V=V(1)*v(2)
AELOPASS int_1 int_4 filter1
.model filter1 x_fer(gain=10 int_ic=[0 0] num_coeff=[1]
+                    den_coeff=[1 1.47e-4]
ELOPASS 4 0 int_4 0 1
```

5.3 G source (non-linear current source)*

5.3.1 CUR

General form:

```
GXXXXXXX n+ n- cur='expr'
```

Examples:

```
G51 55 225 cur = 'V(3)*V(3)-Offs'
```

Expression may be an equation or an expression containing node voltages or branch currents (in the form of i(vm)) and any other terms as given for the B source and described in chapter 5.1. It may contain parameters (2.8.1).

5.3.2 VALUE

Optional syntax:

```
GXXXXXXX n+ n- value='expr'
```

Examples:

```
G51 55 225 value = 'V(3)*V(3)-Offs'
```

5.3.3 TABLE

A data entry by a tabulated listing is available with syntax similar to the E-Source (see chapt. 5.2.3).

Syntax for data entry from table:

```
Gxxx n1 n2 TABLE {expression} = (x0, y0) (x1, y1) (x2, y2)
```

Example (simple comparator with current output and voltage control):

```
GCMP 0 11 TABLE {V(10,9)} = (-5MV, 0V) (5MV, 5V)
R 11 0 1k
```

5.3.4 POLY

see E-Source at chapt. 5.2.4.

5.3.5 LAPLACE

See E-Source, chapt. 5.2.5 , for an equivalent code model replacement.

5.3.6 Example

An example file is given below.

Example input file:

```
VCCS, VCVS, non-linear dependency
.param Vi=1
.param Offs='0.01*Vi'
* VCCS depending on V(3)
B21 int1 0 V = V(3)*V(3)
G1 21 22 int1 0 1
* measure current through VCCS
vm 22 0 dc 0
R21 21 0 1
* new VCCS depending on V(3)
G51 55 225 cur = 'V(3)*V(3)-Offs'
* measure current through VCCS
vm5 225 0 dc 0
R51 55 0 1
* VCVS depending on V(3)
B31 int2 0 V = V(3)*V(3)
E1 1 0 int2 0 1
R1 1 0 1
* new VCVS depending on V(3)
E41 4 0 vol = 'V(3)*V(3)-Offs'
R4 4 0 1
* control voltage
V1 3 0 PWL(0 0 100u {Vi})
.control
set noaskquit
tran 10n 100u uic
plot i(E1) i(E41)
plot i(vm) i(vm5)
.endc
.end
```

*) To get this functionality, the compatibility mode has to be set in **spinit** or **.spiceinit** by `set ngbehavior=all`.

Chapter 6

Transmission Lines

Ngspice implements both the original spice3f5 transmission lines models and the one introduced with kspice. The latter provide an improved transient analysis of lossy transmission lines. Unlike spice models, which uses the state-based approach to simulate lossy transmission lines, kspice simulates lossy transmission lines and coupled multiconductor line systems using the recursive convolution method. The impulse response of an arbitrary transfer function can be determined by deriving a recursive convolution from the Pade approximations of the function. We use this approach for simulating each transmission line's characteristics and each multiconductor line's modal functions. This method of lossy transmission line simulation has been proved to give a speedup of one to two orders of magnitude over spice3f5.

6.1 Lossless Transmission Lines

General form:

```
TXXXXXXX N1 N2 N3 N4 Z0=VALUE <TD=VALUE> <F=FREQ <NL=NRMLEN>>
+ <IC=V1, I1, V2, I2>
```

Examples:

```
T1 1 0 2 0 Z0=50 TD=10NS
```

`n1` and `n2` are the nodes at port 1; `n3` and `n4` are the nodes at port 2. `z0` is the characteristic impedance. The length of the line may be expressed in either of two forms. The transmission delay, `td`, may be specified directly (as td=10ns, for example). Alternatively, a frequency `f` may be given, together with `nl`, the normalized electrical length of the transmission line with respect to the wavelength in the line at the frequency "f". If a frequency is specified but `nl` is omitted, 0.25 is assumed (that is, the frequency is assumed to be the quarter-wave frequency). Note that although both forms for expressing the line length are indicated as optional, one of the two must be specified.

Note that this element models only one propagating mode. If all four nodes are distinct in the actual circuit, then two modes may be excited. To simulate such a situation, two transmission-line elements are required. (see the example in chapt. 20.7 for further clarification.) The (optional) initial condition specification consists of the voltage and current at each of the transmission line ports. Note that the initial conditions (if any) apply "only" if the `UIC` option is specified on the `.TRAN` control line.

Note that a lossy transmission line (see below) with zero loss may be more accurate than than the lossless transmission line due to implementation details.

6.2 Lossy Transmission Lines

General form:

OXXXXXXX n1 n2 n3 n4 mname

Examples:

O23 1 0 2 0 LOSSYMOD
OCONNECT 10 5 20 5 INTERCONNECT

This is a two-port convolution model for single conductor lossy transmission lines. `n1` and `n2` are the nodes at port 1; `n3` and `n4` are the nodes at port 2. Note that a lossy transmission line with zero loss may be more accurate than than the lossless transmission line due to implementation details.

6.2.1 Lossy Transmission Line Model (LTRA)

The uniform RLC/RC/LC/RG transmission line model (referred to as the LTRA model henceforth) models a uniform constant-parameter distributed transmission line. The RC and LC cases may also be modeled using the URC and TRA models; however, the newer LTRA model is usually faster and more accurate than the others. The operation of the LTRA model is based on the convolution of the transmission line's impulse responses with its inputs (see [8]). The LTRA model takes a number of parameters, some of which must be given and some of which are optional.

Name	Parameter	Units/Type	Default	Example
R	resistance/length	$\Omega/unit$	0.0	0.2
L	inductance/length	$H/unit$	0.0	9.13e-9
G	conductance/length	$mhos/unit$	0.0	0.0
C	capacitance/length	$F/unit$	0.0	3.65e-12
LEN	length of line		no default	1.0
REL	breakpoint control	arbitrary unit	1	0.5
ABS	breakpoint control		1	5
NOSTEPLIMIT	don't limit time-step to less than line delay	flag	not set	set
NOCONTROL	don't do complex time-step control	flag	not set	set
LININTERP	use linear interpolation	flag	not set	set
MIXEDINTERP	use linear when quadratic seems bad	flag	not set	set
COMPACTREL	special reltol for history compaction		RELTOL	1.0e-3
COMPACTABS	special abstol for history compaction		ABSTOL	1.0e-9
TRUNCNR	use Newton-Raphson method for time-step control	flag	not set	set
TRUNCDONTCUT	don't limit time-step to keep impulse-response errors low	flag	not set	set

The following types of lines have been implemented so far:

- RLC (uniform transmission line with series loss only),
- RC (uniform RC line),
- LC (lossless transmission line),
- RG (distributed series resistance and parallel conductance only).

Any other combination will yield erroneous results and should not be tried. The length `LEN` of the line must be specified. `NOSTEPLIMIT` is a flag that will remove the default restriction of limiting time-steps to less than the line delay in the RLC case. `NOCONTROL` is a flag that prevents the default limiting of the time-step based on convolution error criteria in the RLC and RC cases. This speeds up simulation but may in some cases reduce the accuracy of results. `LININTERP` is a flag that, when specified, will use linear interpolation instead of the default quadratic interpolation for calculating delayed signals. `MIXEDINTERP` is a flag that, when specified, uses a metric for judging whether quadratic interpolation is not applicable and if so uses linear interpolation; otherwise it uses the default quadratic interpolation. `TRUNCDONTCUT` is a flag that removes the default cutting of the time-step to limit errors in the actual calculation of impulse-response related quantities. `COMPACTREL` and `COMPACTABS` are quantities that control the compaction of the past history of values stored for convolution. Larger values of these lower accuracy but usually increase simulation speed. These are to be used with the `TRYTOCOMPACT` option, described in the `.OPTIONS` section. `TRUNCNR` is a flag that turns on the use of Newton-Raphson iterations to determine an appropriate time-step in the time-step control routines. The

default is a trial and error procedure by cutting the previous time-step in half. `REL` and `ABS` are quantities that control the setting of breakpoints.

The option most worth experimenting with for increasing the speed of simulation is `REL`. The default value of 1 is usually safe from the point of view of accuracy but occasionally increases computation time. A value greater than 2 eliminates all breakpoints and may be worth trying depending on the nature of the rest of the circuit, keeping in mind that it might not be safe from the viewpoint of accuracy.

Breakpoints may usually be entirely eliminated if it is expected the circuit will not display sharp discontinuities. Values between 0 and 1 are usually not required but may be used for setting many breakpoints.

`COMPACTREL` may also be experimented with when the option `TRYTOCOMPACT` is specified in a `.OPTIONS` card. The legal range is between 0 and 1. Larger values usually decrease the accuracy of the simulation but in some cases improve speed. If `TRYTOCOMPACT` is not specified on a `.OPTIONS` card, history compaction is not attempted and accuracy is high.

`NOCONTROL`, `TRUNCDONTCUT` and `NOSTEPLIMIT` also tend to increase speed at the expense of accuracy.

6.3 Uniform Distributed RC Lines

General form:

```
UXXXXXXX n1 n2 n3 mname l=len <n=lumps>
```

Examples:

```
U1 1 2 0 URCMOD L=50U
URC2 1 12 2 UMODL l=1MIL N=6
```

`n1` and `n2` are the two element nodes the RC line connects, while `n3` is the node to which the capacitances are connected. `mname` is the model name, `len` is the length of the RC line in meters. `lumps`, if specified, is the number of lumped segments to use in modeling the RC line (see the model description for the action taken if this parameter is omitted).

6.3.1 Uniform Distributed RC Model (URC)

The URC model is derived from a model proposed by L. Gertzberrg in 1974. The model is accomplished by a subcircuit type expansion of the URC line into a network of lumped RC segments with internally generated nodes. The RC segments are in a geometric progression, increasing toward the middle of the URC line, with K as a proportionality constant. The number of lumped segments used, if not specified for the URC line device, is determined by the following formula:

$$N = \frac{\log \left| F_{\max} \frac{R}{L} \frac{C}{L} 2\pi L^2 \left| \frac{(K-1)}{K} \right|^2 \right|}{\log K} \tag{6.1}$$

The URC line is made up strictly of resistor and capacitor segments unless the `ISPERL` parameter is given a nonzero value, in which case the capacitors are replaced with reverse biased diodes

with a zero-bias junction capacitance equivalent to the capacitance replaced, and with a saturation current of `ISPERL` amps per meter of transmission line and an optional series resistance equivalent to `RSPERL` ohms per meter.

Name	Parameter	Units	Default	Example	Area
K	Propagation Constant	-	2.0	1.2	-
FMAX	Maximum Frequency of interest	Hz	1.0 G	6.5 Meg	-
RPERL	Resistance per unit length	Ω/m	1000	10	-
CPERL	Capacitance per unit length	F/m	10e-15	1 pF	-
ISPERL	Saturation Current per unit length	A/m	0	-	-
RSPERL	Diode Resistance per unit length	Ω/m	0	-	-

6.4 KSPICE Lossy Transmission Lines

Unlike SPICE3, which uses the state-based approach to simulate lossy transmission lines, KSPICE simulates lossy transmission lines and coupled multiconductor line systems using the recursive convolution method. The impulse response of an arbitrary transfer function can be determined by deriving a recursive convolution from the Pade approximations of the function. NGSPICE is using this approach for simulating each transmission line's characteristics and each multiconductor line's modal functions. This method of lossy transmission line simulation has shown to give a speedup of one to two orders of magnitude over SPICE3E.

Additional Documentation Available:

- S. Lin and E. S. Kuh, "Pade Approximation Applied to Transient Simulation of Lossy Coupled Transmission Lines," Proc. IEEE Multi-Chip Module Conference, 1992, pp. 52-55.
- S. Lin, M. Marek-Sadowska, and E. S. Kuh, "SWEC: A StepWise Equivalent Conductance Timing Simulator for CMOS VLSI Circuits," European Design Automation Conf., February 1991, pp. 142-148.
- S. Lin and E. S. Kuh, "Transient Simulation of Lossy Interconnect," Proc. Design Automation Conference, Anaheim, CA, June 1992, pp. 81-86.

6.4.1 Single Lossy Transmission Line (TXL)

General form:

```
YXXXXXXX N1 0 N2 0 mname <LEN=LENGTH>
```

Example:

```
Y1 1 0 2 0 ymod LEN=2
.MODEL ymod txl R=12.45 L=8.972e-9 G=0 C=0.468e-12 length=16
```

`n1` and `n2` are the nodes of the two ports; Optional instance parameter `len` is the length of the line may be expressed in [m].

The TXL model takes a number of parameters:

Name	Parameter	Units/Type	Default	Example
R	resistance/length	$\Omega/unit$	0.0	0.2
L	inductance/length	$H/unit$	0.0	9.13e-9
G	conductance/length	$mhos/unit$	0.0	0.0
C	capacitance/length	$F/unit$	0.0	3.65e-12
LENGTH	length of line		no default	1.0

Model parameter length must be specified.

6.4.2 Coupled Multiconductor Line (CPL)

The CPL multiconductor line model, which in theory should be similar to the RLGC model, but without frequency dependent loss (neither skin effect and nor frequency dependent dielectric loss). Up to 8 coupled lines are supported in NGSPICE.

General form:

PXXXXXXX NI1 NI2 . . . NIX GND1 NO1 NO2 . . . NOX GND2 mname <LEN=LENGTH>

Example:

```
P1 in1 in2 0 b1 b2 0 PLINE
.model PLINE CPL length={Len}
+R=1 0 1
+L={L11} {L12} {L22}
+G=0 0 0
+C={C11} {C12} {C22}
.param Len=1 Rs=0
+ C11=9.143579E-11 C12=-9.78265E-12 C22=9.143578E-11
+ L11=3.83572E-7 L12=8.26253E-8 L22=3.83572E-7
```

ni1 ... **nix** are the nodes at port 1 with gnd1; **no1** ... **n**ox are the nodes at port 2 with gnd2. Optional instance parameter **len** is the length of the lines may be expressed in [m].

The CPL model takes a number of parameters:

Name	Parameter	Units/Type	Default	Example
R	resistance/length	$\Omega/unit$	0.0	0.2
L	inductance/length	$H/unit$	0.0	9.13e-9
G	conductance/length	$mhos/unit$	0.0	0.0
C	capacitance/length	$F/unit$	0.0	3.65e-12
LENGTH	length of line		no default	1.0

All RLGC parameter are given in Maxwell matrix form. For R and G matrix the diagonal elements must be specified, for L and C matrix the lower or upper-triangular elements must specified. Model parameter LENGTH is a scalar and is mandatory.

Chapter 7

Diodes

7.1 Junction Diodes

General form:

```
DXXXXXXX n+ n- mname <area=val> <m=val> <pj=val> <off> <ic=vd>
+ <temp=val> <dtemp=val>
```

Examples:

```
DBRIDGE 2 10 DIODE1
DCLMP 3 7 DMOD AREA=3.0 IC=0.2
```

The pn junction (diode) implemented in ngspice expands the one found in spice3f5. Perimeter effects and high injection level have been introduced into the original model and temperature dependence of some parameters has been added. `n+` and `n-` are the positive and negative nodes, respectively. `mname` is the model name. Instance parameters may follow, dedicated to only the diode described in the respective line. `area` is the area scale factor, which may scale the saturation current given by the model parameters (and others, see table below). `pj` is the perimeter scale factor, scaling the sidewall saturation current and it's associated capacitance. `m` is a multiplier to area and perimeter, and `off` indicates an (optional) starting condition on the device for dc analysis. If the area factor is omitted, a value of 1.0 is assumed. The (optional) initial condition specification using `ic` is intended for use with the `uic` option on the `.tran` control line, when a transient analysis is desired starting from other than the quiescent operating point. You should supply the initial voltage across the diode there. The (optional) `temp` value is the temperature at which this device is to operate, and overrides the temperature specification on the `.option` control line. The temperature of each instance can be can be specified as an offset to the circuit temperature with the `dtemp` option.

7.2 Diode Model (D)

The dc characteristics of the diode are determined by the parameters `is` and `n`. An ohmic resistance, `rs`, is included. Charge storage effects are modeled by a transit time, `tt`, and a nonlinear depletion layer capacitance which is determined by the parameters `cjo`, `vj`, and `m`. The temperature dependence of the saturation current is defined by the parameters `eg`, the energy and `xti`,

the saturation current temperature exponent. The nominal temperature at which these parameters were measured is `tnom`, which defaults to the circuit-wide value specified on the `.options` control line. Reverse breakdown is modeled by an exponential increase in the reverse diode current and is determined by the parameters `bv` and `ibv` (both of which are positive numbers).

Junction DC parameters

Name	*Parameter*	*Units*	*Default*	*Example*	*Scale factor*
BV	Reverse breakdown voltage	*V*	∞	40	
IBV	Current at breakdown voltage	*A*	1.0e-3	1.0e-4	
IK (IKF)	Forward knee current	*A*	1.0e-3	1.0e-6	
IKR	Reverse knee current	*A*	1.0e-3	1.0e-6	
IS (JS)	Saturation current	*A*	1.0e-14	1.0e-16	area
JSW	Sidewall saturation current	*A*	1.0e-14	1.0e-15	perimeter
N	Emission coefficient	-	1	1.5	
RS	Ohmic resistance	Ω	0.0	100	$1/area$

Junction capacitance parameters

Name	*Parameter*	*Units*	*Default*	*Example*	*Scale factor*
CJO (CJ0)	Zero-bias junction bottom-wall capacitance	*F*	0.0	2pF	area
CJP (CJSW)	Zero-bias junction sidewall capacitance	*F*	0.0	.1pF	perimeter
FC	Coefficient for forward-bias depletion bottom-wall capacitance formula	-	0.5	-	
FCS	Coefficient for forward-bias depletion sidewall capacitance formula	-	0.5	-	
M (MJ)	Area junction grading coefficient	-	0.5	0.5	
MJSW	Periphery junction grading coefficient	-	0.33	0.5	
VJ (PB)	Junction potential	*V*	1	0.6	
PHP	Periphery junction potential	*V*	1	0.6	
TT	Transit-time	sec	0	0.1ns	

Temperature effects

Name	*Parameter*	*Units*	*Default*	*Example*	*Scale fac*
EG	Activation energy	*eV*	1.11	1.11 Si 0.69 Sbd 0.67 Ge	
TM1	1st order tempco for MJ	$1/°C$	0.0	-	
TM2	2nd order tempco for MJ	$1/°C^2$	0.0	-	
TNOM (TREF)	Parameter measurement temperature	$°C$	27	50	
TRS1 (TRS)	1st order tempco for RS	$1/°C$	0.0	-	
TRS2	2nd order tempco for RS	$1/°C^2$	0.0	-	
TM1	1st order tempco for MJ	$1/°C$	0.0	-	
TM2	2nd order tempco for MJ	$1/°C^2$	0.0	-	
TTT1	1st order tempco for TT	$1/°C$	0.0	-	
TTT2	2nd order tempco for TT	$1/°C^2$	0.0	-	
XTI	Saturation current temperature exponent	-	3.0	3.0 pn 2.0 Sbd	
TLEV	Diode temperature equation selector	-	0		
TLEVC	Diode capac. temperature equation selector	-	0		
CTA (CTC)	Area junct. cap. temperature coefficient	$1/°C$	0.0	-	
CTP	Perimeter junct. cap. temperature coefficient	$1/°C$	0.0	-	
TCV	Breakdown voltage temperature coefficient	$1/°C$	0.0	-	

Noise modeling

Name	*Parameter*	*Units*	*Default*	*Example*	*Scale factor*
KF	Flicker noise coefficient	-	0		
AF	Flicker noise exponent	-	1		

Diode models may be described in the input file (or an file included by .inc) according to the following example:

General form:

```
.model mname type(pname1=pval1 pname2=pval2 ... )
```

Examples:

```
.model DMOD D (bf=50 is=1e-13 vbf=50)
```

7.3 Diode Equations

The junction diode is the basic semiconductor device and the simplest one modeled in ngspice, but it's model is quite complex, even if not all the physical phenomena affecting a pn junction are modeled. The diode is modeled in three different regions:

- *Forward bias*: the anode is more positive than the cathode, the diode is "on" and can conduct large currents. To avoid convergence problems and unrealistic high current, it is better to specify a series resistance to limit current with `rs` model parameter.

- *Reverse bias*: the cathode is more positive than the anode and the diode is "off". A reverse bias diode conducts a small leakage current.
- *Breakdown*: the breakdown region is model led only if the `bv` model parameter is given. When a diode enters breakdown the current increase exponentially (remember to limit it); `bv` is a positive value.

Parameters Scaling

Model parameters are scaled using the unit-less parameters `area` and `pj` and the multiplier `m` as depicted below:

$AREA_{eff} = \text{AREA} \cdot \text{M}$

$PJ_{eff} = \text{PJ} \cdot \text{M}$

$IS_{eff} = \text{IS} \cdot AREA_{eff} + \text{JSW} * PJ_{eff}$

$IBV_{eff} = \text{IBV} \cdot AREA_{eff}$

$IK_{eff} = \text{IK} \cdot AREA_{eff}$

$IKR_{eff} = \text{IKR} \cdot AREA_{eff}$

$CJ_{eff} = \text{CJ0} \cdot AREA_{eff}$

$CJP_{eff} = \text{CJP} \cdot PJ_{eff}$

Diode DC, Transient and AC model equations

$$I_D = \begin{cases} IS_{eff}(e^{\frac{qV_D}{NkT}} - 1) + V_D * GMIN, & \text{if } V_D \geq -3\frac{NkT}{q} \\ -IS_{eff}[1 + (\frac{3NkT}{qV_De})^3] + V_D * GMIN, & \text{if } -BV_{eff} < V_D < -3\frac{NkT}{q} \\ -IS_{eff}(e^{\frac{-q(BV_{eff}+V_D)}{NkT}}) + V_D * GMIN, & \text{if } V_D \leq -BV_{eff} \end{cases} \tag{7.1}$$

The breakdown region must be described with more depth since the breakdown is not modeled in physically. As written before, the breakdown modeling is based on two model parameters: the "nominal breakdown voltage" `bv` and the current at the onset of breakdown `ibv`. For the diode model to be consistent, the current value cannot be arbitrary chosen, since the reverse bias and breakdown regions must match. When the diode enters breakdown region from reverse bias, the current is calculated using the formula[1]:

$$I_{bdwn} = -IS_{eff}(e^{\frac{-q\text{BV}}{NkT}} - 1) \tag{7.2}$$

The computed current is necessary to adjust the breakdown voltage making the two regions match. The algorithm is a little bit convoluted and only a brief description is given here:

Most real diodes shows a current increase that, at high current levels, does not follow the exponential relationship given above. This behavior is due to high level of carriers injected into the junction. High injection effects (as they are called) are modeled with `ik` and `ikr`.

[1] if you look at the source code in file `diotemp.c` you will discover that the exponential relation is replaced with a first order Taylor series expansion.

Algorithm 7.1 Diode breakdown current calculation

if $IBV_{eff} < I_{bdwn}$ then
 $IBV_{eff} = I_{bdwn}$
 $BV_{eff} = \mathrm{BV}$
else
 $BV_{eff} = \mathrm{BV} - \mathrm{N}V_t \ln(\frac{IBV_{eff}}{I_{bdwn}})$

$$I_{Deff} = \begin{cases} \frac{I_D}{1+\sqrt{\frac{I_D}{IK_{eff}}}}, & \text{if } V_D \geq -3\frac{NkT}{q} \\ \frac{I_D}{1+\sqrt{\frac{I_D}{IKR_{eff}}}}, & \text{otherwise.} \end{cases} \tag{7.3}$$

Diode capacitance is divided into two different terms:

- Depletion capacitance
- Diffusion capacitance

Depletion capacitance is composed by two different contributes, one associated to the bottom of the junction (bottom-wall depletion capacitance) and the other to the periphery (sidewall depletion capacitance). The basic equations are:

$$C_{Diode} = C_{diffusion} + C_{depletion}$$

Where the depletion capacitance i defined as:

$$C_{depletion} = C_{depl_{bw}} + C_{depl_{sw}}$$

The diffusion capacitance, due to the injected minority carriers is modeled with the transit time `tt`:

$$C_{diffusion} = \mathrm{TT}\frac{\partial I_{Deff}}{\partial V_D}$$

The depletion capacitance is more complex to model, since the function used to approximate it diverges when the diode voltage become greater than the junction built-in potential. To avoid function divergence, the capacitance function is approximated with a linear extrapolation for applied voltage greater than a fraction of the junction built-in potential.

$$C_{depl_{bw}} = \begin{cases} CJ_{eff} \cdot (1 - \frac{V_D}{\mathrm{VJ}})^{-\mathrm{MJ}}, & \text{if } V_D < \mathrm{FC} \cdot \mathrm{VJ} \\ CJ_{eff} \cdot \frac{1-\mathrm{FC}\cdot(1+\mathrm{MJ}I)+\mathrm{MJ}\cdot\frac{V_D}{\mathrm{VJ}}}{(1-\mathrm{FC})^{(1+\mathrm{MJ})}}, & otherwise. \end{cases} \tag{7.4}$$

$$C_{depl_{sw}} = \begin{cases} CJP_{eff} \cdot (1 - \frac{V_D}{\mathrm{PHP}})^{-\mathrm{MJSW}}, & \text{if } \mathrm{V_D} < \mathrm{FCS} \cdot \mathrm{PHP} \\ CJP_{eff} \cdot \frac{1-\mathrm{FCS}\cdot(1+\mathrm{MJSW})+\mathrm{MJSW}\cdot\frac{V_D}{\mathrm{PHP}}}{(1-\mathrm{FCS})^{(1+\mathrm{MJSW})}}, & otherwise. \end{cases} \tag{7.5}$$

Temperature dependence

The temperature affects many of the parameters in the equations above, the following equations show how. One of the most significant parameter that varies with the temperature for a semiconductor is the band-gap energy:

$$EG_{nom} = 1.16 - 7.02e^{-4} \cdot \frac{\text{TNOM}^2}{\text{TNOM} + 1108.0} \tag{7.6}$$

$$EG(T) = 1.16 - 7.02e^{-4} \cdot \frac{T^2}{\text{TNOM} + 1108.0} \tag{7.7}$$

The leakage currents temperature dependence is:

$$IS(T) = \text{IS} \cdot e^{\frac{logfactor}{\text{N}}} \tag{7.8}$$

$$JSW(T) = \text{JSW} \cdot e^{\frac{logfactor}{\text{N}}} \tag{7.9}$$

where "logfactor" is defined:

$$logfactor = \frac{\text{EG}}{V_t(\text{TNOM})} - \frac{\text{EG}}{V_t(T)} + \text{XTI} \cdot \ln(\frac{T}{\text{TNOM}}) \tag{7.10}$$

The contact potentials (bottom-wall an sidewall) temperature dependence is:

$$VJ(T) = \text{VJ} \cdot (\frac{T}{\text{TNOM}}) - V_t(T) \cdot \left[3 \cdot \ln(\frac{T}{\text{TNOM}}) + \frac{\text{EG}_{\text{nom}}}{V_t(\text{TNOM})} - \frac{\text{EG(T)}}{V_t(T)}\right] \tag{7.11}$$

$$PHP(T) = \text{PHP} \cdot (\frac{T}{\text{TNOM}}) - V_t(T) \cdot \left[3 \cdot \ln(\frac{T}{\text{TNOM}}) + \frac{\text{EG}_{\text{nom}}}{V_t(\text{TNOM})} - \frac{\text{EG(T)}}{V_t(T)}\right] \tag{7.12}$$

The depletion capacitances temperature dependence is:

$$CJ(T) = \text{CJ} \cdot \left[1 + \text{MJ} \cdot (4.0e^{-4} \cdot (T - \text{TNOM}) - \frac{VJ(T)}{\text{VJ}} + 1)\right] \tag{7.13}$$

$$CJSW(T) = \text{CJSW} \cdot \left[1 + \text{MJSW} \cdot (4.0e^{-4} \cdot (T - \text{TNOM}) - \frac{PHP(T)}{\text{PHP}} + 1)\right] \tag{7.14}$$

The transit time temperature dependence is:

$$TT(T) = \text{TT} \cdot (1 + \text{TTT1} \cdot (T - \text{TNOM}) + \text{TTT2} \cdot (T - \text{TNOM})^2) \tag{7.15}$$

The junction grading coefficient temperature dependence is:

$$MJ(T) = \text{MJ} \cdot (1 + \text{TM1} \cdot (T - \text{TNOM}) + \text{TM2} \cdot (T - \text{TNOM})^2) \tag{7.16}$$

The series resistance temperature dependence is:

$$RS(T) = \text{RS} \cdot (1 + \text{TRS} \cdot (T - \text{TNOM}) + \text{TRS2} \cdot (T - \text{TNOM})^2) \tag{7.17}$$

Noise model

The diode has three noise contribution, one due to the presence of the parasitic resistance `rs` and the other two (shot and flicker) due to the pn junction.

The thermal noise due to the parasitic resistance is:

$$\overline{i_{RS}^2} = \frac{4kT\Delta f}{RS} \tag{7.18}$$

The shot and flicker noise contributions are:

$$\overline{i_d^2} = 2qI_D\Delta f + \frac{KF * I_D^{AF}}{f}\Delta f \tag{7.19}$$

Chapter 8

BJTs

8.1 Bipolar Junction Transistors (BJTs)

General form:

```
QXXXXXXX nc nb ne <ns> mname <area=val> <areac=val> <areab=val>
+ <m=val> <off> <ic=vbe,vce> <temp=val> <dtemp=val>
```

Examples:

```
Q23 10 24 13 QMOD IC=0.6, 5.0
Q50A 11 26 4 20 MOD1
```

nc, **nb**, and **ne** are the collector, base, and emitter nodes, respectively. **ns** is the (optional) substrate node. If unspecified, ground is used. **mname** is the model name, **area**, **areab**, **areac** are the area factors (emitter, base and collector respectively), and **off** indicates an (optional) initial condition on the device for the dc analysis. If the area factor is omitted, a value of 1.0 is assumed.

The (optional) initial condition specification using **ic=vbe,vce** is intended for use with the **uic** option on a `.tran` control line, when a transient analysis is desired starting from other than the quiescent operating point. See the `.ic` control line description for a better way to set transient initial conditions. The (optional) **temp** value is the temperature at which this device is to operate, and overrides the temperature specification on the `.option` control line. Using **dtemp** option you can specify instance's temperature relative to the circuit temperature.

8.2 BJT Models (NPN/PNP)

Ngspice provides three BJT device models. The **level** keyword specifies the model to be used:

- level=1 : This is the original spice BJT model, and it is the default model if the **level** keyword is not specified on the `.model` line.
- level=2 : This is a modified version of the original spice BJT that models both vertical and lateral devices and includes temperature corrections of collector, emitter and base resistors.

- level=4: Advanced VBIC model (see http://www.designers-guide.org/VBIC/ for details)

The bipolar junction transistor model in ngspice is an adaptation of the integral charge control model of Gummel and Poon. This modified Gummel-Poon model extends the original model to include several effects at high bias levels. The model automatically simplifies to the simpler Ebers-Moll model when certain parameters are not specified. The parameter names used in the modified Gummel-Poon model have been chosen to be more easily understood by the program user, and to reflect better both physical and circuit design thinking.

The dc model is defined by the parameters **is**, **bf**, **nf**, **ise**, **ikf**, and **ne** which determine the forward current gain characteristics, **is**, **br**, **nr**, **isc**, **ikr**, and **nc** which determine the reverse current gain characteristics, and **vaf** and **var** which determine the output conductance for forward and reverse regions.

Level 1 model has among the standard temperature model a extension which is compatible with most foundry provided process design kits (see parameter table below **tlev**).

Level 1 and 2 model includes substrate saturation current **iss**. Three ohmic resistances **rb**, **rc**, and **re** are included, where **rb** can be high current dependent. Base charge storage is modelled by forward and reverse transit times, **tf** and **tr**, the forward transit time **tf** being bias dependent if desired, and nonlinear depletion layer capacitances which are determined by **cje**, **vje**, and **nje** for the B-E junction, **cjc**, **vjc**, and **njc** for the B-C junction and **cjs**, **vjs**, and **mjs** for the C-S (Collector-Substrate) junction.

Level 1 and 2 model defines a substrate capacitance that will be connected to device's base or collector, to model lateral or vertical devices dependent from the parameter **subs**. The temperature dependence of the saturation currents, **is** and **iss** (for level 2 model), is determined by the energy-gap, **eg**, and the saturation current temperature exponent, **xti**.

Additionally base current temperature dependence is modeled by the beta temperature exponent **xtb** in the new model. The values specified are assumed to have been measured at the temperature **tnom**, which can be specified on the `.options` control line or overridden by a specification on the `.model` line.

Level 4 model (VBIC) has the following improvements beyond the GP models: Improved Early effect modeling, Quasi-saturation modeling, Parasitic substrate transistor modeling, Parasitic fixed (oxide) capacitance modeling, Includes an avalanche multiplication model, Improved temperature modeling, Base current is decoupled from collector current, Electrothermal modeling, Smooth, continuous mode.

The BJT parameters used in the modified Gummel-Poon model are listed below. The parameter names used in earlier versions of spice2 are still accepted.

Gummel-Poon BJT Parameters (incl. model extensions)

Name	Parameters	Units	Default	Example	Scale factor
SUBS	Substrate connection: for vertical geometry, -1 for lateral geometry (level 2 only).		1		
IS	Transport saturation current.	*A*	1.0e-16	1.0e-15	area

ISS	Reverse saturation current, substrate-to-collector for vertical device or substrate-to-base for lateral (level 2 only).	*A*	1.0e-16	1.0e-15	area
BF	Ideal maximum forward beta.	-	100	100	
NF	Forward current emission coefficient.	-	1.0	1	
VAF (VA)	Forward Early voltage.	*V*	∞	200	
IKF	Corner for forward beta current roll-off.	*A*	∞	0.01	area
NKF	High current Beta rolloff exponent	-	0.5	0.58	
ISE	B-E leakage saturation current.	*A*	0.0	1e-13	area
NE	B-E leakage emission coefficient.	-	1.5	2	
BR	Ideal maximum reverse beta.	-	1	0.1	
NR	Reverse current emission coefficient.	-	1	1	
VAR (VB)	Reverse Early voltage.	*V*	∞	200	
IKR	Corner for reverse beta high current roll-off.	*A*	∞	0.01	area
ISC	B-C leakage saturation current (area is "areab" for vertical devices and "areac" for lateral).	*A*	0.0	1e-13	area
NC	B-C leakage emission coefficient.	-	2	1.5	
RB	Zero bias base resistance.	Ω	0	100	area
IRB	Current where base resistance falls halfway to its min value.	*A*	∞	0.1	area
RBM	Minimum base resistance at high currents.	Ω	RB	10	area
RE	Emitter resistance.	Ω	0	1	area
RC	Collector resistance.	Ω	0	10	area
CJE	B-E zero-bias depletion capacitance.	*F*	0	2pF	area
VJE (PE)	B-E built-in potential.	*V*	0.75	0.6	
MJE (ME)	B-E junction exponential factor.	-	0.33	0.33	
TF	Ideal forward transit time.	sec	0	0.1ns	
XTF	Coefficient for bias dependence of TF.	-	0		
VTF	Voltage describing VBC dependence of TF.	*V*	∞		
ITF	High-current parameter for effect on TF.	*A*	0	-	area
PTF	Excess phase at freq=1.0/(TF*2PI) Hz.	deg	0		

CJC	B-C zero-bias depletion capacitance (area is "areab" for vertical devices and "areac" for lateral).	*F*	0	2pF	area
VJC (PC)	B-C built-in potential.	*V*	0.75	0.5	
MJC	B-C junction exponential factor.	-	0.33	0.5	
XCJC	Fraction of B-C depletion capacitance connected to internal base node.	-	1		
TR	Ideal reverse transit time.	sec	0	10ns	
CJS	Zero-bias collector-substrate capacitance (area is "areac" for vertical devices and"areab" for lateral).	*F*	0	2pF	area
VJS (PS)	Substrate junction built-in potential.	*V*	0.75		
MJS (MS)	Substrate junction exponential factor.	-	0	0.5	
XTB	Forward and reverse beta temperature exponent.	-	0		
EG	Energy gap for temperature effect on IS.	*eV*	1.11		
XTI	Temperature exponent for effect on IS.	-	3		
KF	Flicker-noise coefficient.	-	0		
AF	Flicker-noise exponent.	-	1		
FC	Coefficient for forward-bias depletion capacitance formula.	-	0.5	0	
TNOM (TREF)	Parameter measurement temperature.	$°C$	27	50	
TLEV	BJT temperature equation selector	-	0		
TLEVC	BJT capac. temperature equation selector	-	0		
TRE1	1st order temperature coefficient for RE.	$1/°C$	0.0	1e-3	
TRE2	2nd order temperature coefficient for RE.	$1/°C^2$	0.0	1e-5	
TRC1	1st order temperature coefficient for RC .	$1/°C$	0.0	1e-3	
TRC2	2nd order temperature coefficient for RC.	$1/°C^2$	0.0	1e-5	
TRB1	1st order temperature coefficient for RB.	$1/°C$	0.0	1e-3	
TRB2	2nd order temperature coefficient for RB.	$1/°C^2$	0.0	1e-5	

TRBM1	1st order temperature coefficient for RBM	$1/^{\circ}C$	0.0	1e-3	
TRBM2	2nd order temperature coefficient for RBM	$1/^{\circ}C^2$	0.0	1e-5	
TBF1	1st order temperature coefficient for BF	$1/^{\circ}C$	0.0	1e-3	
TBF2	2nd order temperature coefficient for BF	$1/^{\circ}C^2$	0.0	1e-5	
TBR1	1st order temperature coefficient for BR	$1/^{\circ}C$	0.0	1e-3	
TBR2	2nd order temperature coefficient for BR	$1/^{\circ}C^2$	0.0	1e-5	
TIKF1	1st order temperature coefficient for IKF	$1/^{\circ}C$	0.0	1e-3	
TIKF2	2nd order temperature coefficient for IKF	$1/^{\circ}C^2$	0.0	1e-5	
TIKR1	1st order temperature coefficient for IKR	$1/^{\circ}C$	0.0	1e-3	
TIKR2	2nd order temperature coefficient for IKR	$1/^{\circ}C^2$	0.0	1e-5	
TIRB1	1st order temperature coefficient for IRB	$1/^{\circ}C$	0.0	1e-3	
TIRB2	2nd order temperature coefficient for IRB	$1/^{\circ}C^2$	0.0	1e-5	
TNC1	1st order temperature coefficient for NC	$1/^{\circ}C$	0.0	1e-3	
TNC2	2nd order temperature coefficient for NC	$1/^{\circ}C^2$	0.0	1e-5	
TNE1	1st order temperature coefficient for NE	$1/^{\circ}C$	0.0	1e-3	
TNE2	2nd order temperature coefficient for NE	$1/^{\circ}C^2$	0.0	1e-5	
TNF1	1st order temperature coefficient for NF	$1/^{\circ}C$	0.0	1e-3	
TNF2	2nd order temperature coefficient for NF	$1/^{\circ}C^2$	0.0	1e-5	
TNR1	1st order temperature coefficient for IKF	$1/^{\circ}C$	0.0	1e-3	
TNR2	2nd order temperature coefficient for IKF	$1/^{\circ}C^2$	0.0	1e-5	
TVAF1	1st order temperature coefficient for VAF	$1/^{\circ}C$	0.0	1e-3	
TVAF2	2nd order temperature coefficient for VAF	$1/^{\circ}C^2$	0.0	1e-5	
TVAR1	1st order temperature coefficient for VAR	$1/^{\circ}C$	0.0	1e-3	

TVAR2	2nd order temperature coefficient for VAR	$1/°C^2$	0.0	1e-5	
CTC	1st order temperature coefficient for CJC	$1/°C$	0.0	1e-3	
CTE	1st order temperature coefficient for CJE	$1/°C$	0.0	1e-3	
CTS	1st order temperature coefficient for CJS	$1/°C$	0.0	1e-3	
TVJC	1st order temperature coefficient for VJC	$1/°C^2$	0.0	1e-5	
TVJE	1st order temperature coefficient for VJE	$1/°C$	0.0	1e-3	
TITF1	1st order temperature coefficient for ITF	$1/°C$	0.0	1e-3	
TITF2	2nd order temperature coefficient for ITF	$1/°C^2$	0.0	1e-5	
TTF1	1st order temperature coefficient for TF	$1/°C$	0.0	1e-3	
TTF2	2nd order temperature coefficient for TF	$1/°C^2$	0.0	1e-5	
TTR1	1st order temperature coefficient for TR	$1/°C$	0.0	1e-3	
TTR2	2nd order temperature coefficient for TR	$1/°C^2$	0.0	1e-5	
TMJE1	1st order temperature coefficient for MJE	$1/°C$	0.0	1e-3	
TMJE2	2nd order temperature coefficient for MJE	$1/°C^2$	0.0	1e-5	
TMJC1	1st order temperature coefficient for MJC	$1/°C$	0.0	1e-3	
TMJC2	2nd order temperature coefficient for MJC	$1/°C^2$	0.0	1e-5	

Chapter 9

JFETs

9.1 Junction Field-Effect Transistors (JFETs)

General form:

```
JXXXXXXX nd ng ns mname <area> <off> <ic=vds,vgs> <temp=t>
```

Examples:

```
J1 7 2 3 JM1 OFF
```

nd, **ng**, and **ns** are the drain, gate, and source nodes, respectively. **mname** is the model name, **area** is the area factor, and **off** indicates an (optional) initial condition on the device for dc analysis. If the area factor is omitted, a value of 1.0 is assumed. The (optional) initial condition specification, using **ic=VDS,VGS** is intended for use with the **uic** option on the `.TRAN` control line, when a transient analysis is desired starting from other than the quiescent operating point. See the `.ic` control line for a better way to set initial conditions. The (optional) `temp` value is the temperature at which this device is to operate, and overrides the temperature specification on the `.option` control line.

9.2 JFET Models (NJF/PJF)

9.2.1 Model by Parker and Skellern

The **level 1** JFET model is derived from the FET model of Shichman and Hodges. The dc characteristics are defined by the parameters **vto** and **beta**, which determine the variation of drain current with gate voltage, **lambda**, which determines the output conductance, and **is**, the saturation current of the two gate junctions. Two ohmic resistances, **rd** and **rs**, are included. Charge storage is modeled by nonlinear depletion layer capacitances for both gate junctions which vary as the $-1/2$ power of junction voltage and are defined by the parameters **cgs**, **cgd**, and **pb**.

Note that in Spice3f and later, a fitting parameter "**b**" has been added. For details, see [9].

Name	Parameter	Units	Default	Example	Scaling factor
VTO	Threshold voltage V_{T0}	V	-2.0	-2.0	
BETA	Transconductance parameter (β)	A/V^2	1.0e-4	1.0e-3	area
LAMBDA	Channel-length modulation parameter (λ)	$1/V$	0	1.0e-4	
RD	Drain ohmic resistance	Ω	0	100	area
RS	Source ohmic resistance	Ω	0	100	area
CGS	Zero-bias G-S junction capacitance C_{gs}	F	0	5pF	area
CGD	Zero-bias G-D junction capacitance C_{gd}	F	0	1pF	area
PB	Gate junction potential	V	1	0.6	
IS	Gate saturation current I_S	A	1.0e-14	1.0e-14	area
B	Doping tail parameter	-	1	1.1	
KF	Flicker noise coefficient	-	0		
AF	Flicker noise exponent	-	1		
FC	Coefficient for forward-bias depletion capacitance formula		0.5		
TNOM	Parameter measurement temperature	$°C$	27	50	

9.2.2 Modified Parker Skellern model

The level 2 model is an improvement to level 1. Details are available from Macquarie University. Some important items are:

- The description maintains strict continuity in its high-order derivatives, which is essential for prediction of distortion and intermodulation.
- Frequency dependence of output conductance and transconductance is described as a function of bias.
- Both drain-gate and source-gate potentials modulate the pinch-off potential, which is consistent with S-parameter and pulsed-bias measurements.
- Self-heating varies with frequency.
- Extreme operating regions - subthreshold, forward gate bias, controlled resistance, and breakdown regions - are included.
- Parameters provide independent fitting to all operating regions. It is not necessary to compromise one region in favor of another.
- Strict drain-source symmetry is maintained. The transition during drain-source potential reversal is smooth and continuous.

The model equations are described in this pdf document and in [19].

Name	Description	Unit Type	Default
ID	Device IDText	Text	PF1
ACGAM	Capacitance modulation	None	0
BETA	Linear-region transconductance scale	None	10^{-4}
CGD	Zero-bias gate-source capacitance	Capacitance	0 F
CGS	Zero-bias gate-drain capacitance	Capacitance	0 F
DELTA	Thermal reduction coefficient	None	0 W
FC	Forward bias capacitance parameter	None	0.5
HFETA	High-frequency VGS feedback parameter	None	0
HFE1	HFGAM modulation by VGD	None	$0V^{-1}$
HFE2	HFGAM modulation by VGS	None	0 V−1
HFGAM	High-frequency VGD feedback parameter	None	0
HFG1	HFGAM modulation by VSG	None	0 V−1
HFG2	HFGAM modulation by VDG	None	0 V−1
IBD	Gate-junction breakdown current	Current	0 A
IS	Gate-junction saturation current	Current	10−14A
LFGAM	Low-frequency feedback parameter	None	0
LFG1	LFGAM modulation by VSG	None	0 V−1
LFG2	LFGAM modulation by VDG	None	0 V−1
MVST	Subthreshold modulation	None	0 V−1
N	Gate-junction ideality factor	None	1
P	Linear-region power-law exponent	None	2
Q	Saturated-region power-law exponent	None	2
RS	Source ohmic resistance	Resistance	0 Ohm
RD	Drain ohmic resistance	Resistance	0 Ohm
TAUD	Relaxation time for thermal reduction	Time	0 s
TAUG	Relaxation time for gamma feedback	Time	0 s
VBD	Gate-junction breakdown potential	Voltage	1 V
VBI	Gate-junction potential	Voltage	1 V
VST	Subthreshold potential	Voltage	0 V
VTO	Threshold voltage	Voltage	-2.0 V
XC	Capacitance pinch-off reduction factor	None	0
XI	Saturation-knee potential factor	None	1000
Z	Knee transition parameter	None	0.5
RG	Gate ohmic resistance	Resistance	0 Ohm
LG	Gate inductance	Inductance	0 H
LS	Source inductance	Inductance	0 H
LD	Drain inductance	Inductance	0 H
CDSS	Fixed Drain-source capacitance	Capacitance	0 F
AFAC	Gate-width scale factor	None	1
NFING	Number of gate fingers scale factor	None	1
TNOM	Nominal Temperature (Not implemented)	Temperature	300 K
TEMP	Temperature	Temperature	300 K

Chapter 10

MESFETs

10.1 MESFETs

General form:

ZXXXXXXX ND NG NS MNAME <AREA> <OFF> <IC=VDS, VGS>

Examples:

Z1 7 2 3 ZM1 OFF

10.2 MESFET Models (NMF/PMF)

10.2.1 Model by Statz e.a.

The MESFET model **level 1** is derived from the GaAs FET model of Statz et al. as described in [11]. The dc characteristics are defined by the parameters VTO, B, and BETA, which determine the variation of drain current with gate voltage, ALPHA, which determines saturation voltage, and LAMBDA, which determines the output conductance. The formula are given by:

$$I_d = \begin{cases} \frac{B(V_{gs}-V_T)^2}{1+b(V_{gs}-V_T)} \left| 1 - \left| 1 - A\frac{V_{ds}}{3} \right|^3 \right| (1+LV_{ds}) & \text{for } 0 < V_{ds} < \frac{3}{A} \\ \frac{B(V_{gs}-V_T)^2}{1+b(V_{gs}-V_T)} (1+LV_{ds}) & \text{for } V > \frac{3}{A} \end{cases} \tag{10.1}$$

Two ohmic resistances, `rd` and `rs`, are included. Charge storage is modeled by total gate charge as a function of gate-drain and gate-source voltages and is defined by the parameters `cgs`, `cgd`, and `pb`.

Name	Parameter	Units	Default	Example	Area
VTO	Pinch-off voltage	V	-2.0	-2.0	
BETA	Transconductance parameter	A/V^2	1.0e-4	1.0e-3	*
B	Doping tail extending parameter	$1/V$	0.3	0.3	*
ALPHA	Saturation voltage parameter	$1/V$	2	2	*
LAMBDA	Channel-length modulation parameter	$1/V$	0	1.0e-4	
RD	Drain ohmic resistance	Ω	0	100	*
RS	Source ohmic resistance	Ω	0	100	*
CGS	Zero-bias G-S junction capacitance	F	0	5pF	*
CGD	Zero-bias G-D junction capacitance	F	0	1pF	*
PB	Gate junction potential	V	1	0.6	
KF	Flicker noise coefficient	-	0		
AF	Flicker noise exponent	-	1		
FC	Coefficient for forward-bias depletion capacitance formula	-	0.5		

Device instance:

```
z1 2 3 0 mesmod area=1.4
```

Model:

```
.model mesmod nmf level=1 rd=46 rs=46 vt0=-1.3
+ lambda=0.03 alpha=3 beta=1.4e-3
```

10.2.2 Model by Ytterdal e.a.

level 2 (and levels 3,4) Copyright 1993: T. Ytterdal, K. Lee, M. Shur and T. A. Fjeldly

to be written

M. Shur, T.A. Fjeldly, T. Ytterdal, K. Lee, "Unified GaAs MESFET Model for Circuit Simulation", Int. Journal of High Speed Electronics, vol. 3, no. 2, pp. 201-233, 1992

10.2.3 hfet1

level 5

to be written

no documentation available

10.2.4 hfet2

level6

to be written

no documentation available

Chapter 11

MOSFETs

Ngspice supports all the original mosfet models present in spice3f5 and almost all the newer ones that have been published and made open-source. Both bulk and SOI (Silicon on Insulator) models are available. When compiled with the cider option, ngspice implements the four terminals numerical model that can be used to simulate a MOSFET (please refer to numerical modeling documentation for additional information and examples).

11.1 MOSFET devices

General form:

```
MXXXXXXX nd ng ns nb mname <m=val> <l=val> <w=val>
+ <ad=val> <as=val> <pd=val> <ps=val> <nrd=val>
+ <nrs=val> <off> <ic=vds, vgs, vbs> <temp=t>
```

Examples:

```
M1 24 2 0 20 TYPE1
M31 2 17 6 10 MODM L=5U W=2U
M1 2 9 3 0 MOD1 L=10U W=5U AD=100P AS=100P PD=40U PS=40U
```

Note the suffixes in the example: the suffix "u" specifies microns (1e-6 m) and "p" sq-microns (1e-12 m^2).

In the instance card, **nd**, **ng**, **ns**, and **nb** are the drain, gate, source, and bulk (substrate) nodes, respectively. **mname** is the model name and **m** is the multiplicity parameter, which simulates "m" paralleled devices. All MOS models support the "**m**" multiplier parameter. Instance parameters **l** and **w**, channel length and width respectively, are expressed in meters. The areas of drain and source diffusions: **ad** and **as**, in squared meters (m^2).

If any of **l**, **w**, **ad**, or **as** are not specified, default values are used. The use of defaults simplifies input file preparation, as well as the editing required if device geometries are to be changed. **pd** and **ps** are the perimeters of the drain and source junctions, in meters. **nrd** and **nrs** designate the equivalent number of squares of the drain and source diffusions; these values multiply the sheet resistance **rsh** specified on the `.model` control line for an accurate representation of the parasitic series drain and source resistance of each transistor. **pd** and **ps** default to 0.0 while **nrd** and **nrs** to 1.0. **off** indicates an (optional) initial condition on the device for dc analysis. The

(optional) initial condition specification using `ic=vds,vgs,vbs` is intended for use with the `uic` option on the `.tran` control line, when a transient analysis is desired starting from other than the quiescent operating point. See the `.ic` control line for a better and more convenient way to specify transient initial conditions. The (optional) `temp` value is the temperature at which this device is to operate, and overrides the temperature specification on the `.option` control line.

The temperature specification is ONLY valid for level 1, 2, 3, and 6 MOSFETs, not for level 4 or 5 (BSIM) devices.

BSIM3.2 version is also supporting the instance parameter `delvto` and `mulu0` for local mismatch and NBTI (negative bias temperature instability) modeling:

Name	Parameter	Units	Default	Example
delvto	Threshold voltage shift	*V*	0.0	0.07
mulu0	Low-field mobility multiplier (U0)	-	1.0	0.9

11.2 MOSFET models (NMOS/PMOS)

MOSFET models are the central part of ngspice, probably because they are the most widely used devices in the electronics world. Ngspice provides all the MOSFETs implemented in the original Spice3f and adds several models developed by Berkeley's Device Group and other independent groups. The variable `level` specifies the model to be used and a short summary of available device is show in 11.1.

Note: not all models below are included in the standard ngspice distribution because of copyright restrictions.

Ngspice provides four MOSFET device models, which differ in the formulation of the I-V characteristic.

11.2.1 MOS Level 1

This model is also known as the "Schichman-Hodges" model. This is the first model written and the one often described in the introductory textbooks of electronics. This model i applicable only to long channel devices and, the use of Meyer's model for the C-V part makes it non charge conserving.

11.2.2 MOS Level 2

This model tries to overcome the limitations of the Level 1 model addressing several short-channel effect, like velocity saturation. The implementation of this model is complicated and this leads to many convergence problems. C-V calculations can be done with the original Meyer model (non conserving).

11.2.3 MOS Level 3

This is a semi-empirical model derived from the Level 2 one. This model is often used for digital design and, in the years, has proved to be robust. A discontinuity in the model with respect to

Level	Name	Model	Version	Developer	References	Notes
1	MOS1	Shichman-Hodges	-	Berkeley		This is the classical quadratic model.
2	MOS2	Grove-Frhoman	-	Berkeley		Described in [2]
3	MOS3			Berkeley		A semi-empirical model (see [1])
4	BSIM1			Berkeley		Described in [3]
5	BSIM2			Berkeley		Described in [5]
6	MOS6			Berkeley		Described in [2]
9	MOS9			Alan Gillespie		
8, 49	BSIM3v0		3.0	Berkeley		extensions by Alan Gillespie
8, 49	BSIM3v1		3.1	Berkeley		extensions by Serban Popescu
8, 49	BSIM3v32		3.2 - 3.2.4	Berkeley		Multi version code
8, 49	BSIM3		3.3.0	Berkeley		Described in [13]
10, 58	B4SOI		4.3.1	Berkeley		
14, 54	BSIM4v4		4.0 - 4.4	Berkeley		Multi version code
14, 54	BSIM4v5		4.5.0	Berkeley		
14, 54	BSIM4v6		4.6.5	Berkeley		
14, 54	BSIM4		4.7.0	Berkeley		
44	EKV			EPFL		adms configured
45	PSP		1.0.2	Gildenblatt		adms configured
55	B3SOIFD			Berkeley		
56	B3SOIDD			Berkeley		
57	B3SOIPD			Berkeley		
60	STAG		SOI3	Southampton		
61	HiSIM2		2.5.1	Hiroshima		
62	HiSIM_HV		1.2.2	Hiroshima		High Voltage Version for LDMOS

Table 11.1: MOSFET model summary

the KAPPA parameter has been detected (see [10]). The supplied fix has been implemented in Spice3f2 and later. Since this fix may affect parameter fitting, the option "**badmos3**" may be set to use the old implementation (see the section on simulation variables and the ".options" line). Ngspice level 3 implementation takes into account length and width mask adjustments (**xl** and **xw**) and device width narrowing due to diffusion (**wd**).

11.2.4 MOS Level 6

This model is described in [2]. The model can express the current characteristics of short-channel MOSFETs at least down to 0. 25 μm channel-length, GaAs FET, and resistance inserted MOSFETs. The model evaluation time is about 1/3 of the evaluation time of the spice3 mos level 3 model. The model also enables analytical treatments of circuits in short-channel region and makes up for a missing link between a complicated MOSFET current characteristics and circuit behaviors in the deep submicron region.

11.2.5 Notes on Level 1-6 models

The dc characteristics of the level 1 through level 3 MOSFETs are defined by the device parameters **vto**, **kp**, **lambda**, **phi** and **gamma**. These parameters are computed by ngspice if process parameters (**nsub**, **tox**, ...) are given, but users specified values always override. **vto** is positive (negative) for enhancement mode and negative (positive) for depletion mode N-channel (P-channel) devices.

Charge storage is modeled by three constant capacitors, **cgso**, **cgdo**, and **cgbo** which represent overlap capacitances, by the nonlinear thin-oxide capacitance which is distributed among the gate, source, drain, and bulk regions, and by the nonlinear depletion-layer capacitances for both substrate junctions divided into bottom and periphery, which vary as the **mj** and **mjsw** power of junction voltage respectively, and are determined by the parameters **cbd**, **cbs**, **cj**, **cjsw**, **mj**, **mjsw** and **pb**.

Charge storage effects are modeled by the piecewise linear voltages-dependent capacitance model proposed by Meyer. The thin-oxide charge-storage effects are treated slightly different for the level 1 model. These voltage-dependent capacitances are included only if **tox** is specified in the input description and they are represented using Meyer's formulation.

There is some overlap among the parameters describing the junctions, e.g. the reverse current can be input either as **is** (in A) or as **js** (in A/m^2). Whereas the first is an absolute value the second is multiplied by **ad** and **as** to give the reverse current of the drain and source junctions respectively.

This methodology has been chosen since there is no sense in relating always junction characteristics with **ad** and **as** entered on the device line; the areas can be defaulted. The same idea applies also to the zero-bias junction capacitances **cbd** and **cbs** (in F) on one hand, and **cj** (in F/m^2) on the other.

The parasitic drain and source series resistance can be expressed as either **rd** and **rs** (in ohms) or **rsh** (in ohms/sq.), the latter being multiplied by the number of squares **nrd** and **nrs** input on the device line.

NGSPICE level 1, 2, 3 and 6 parameters

Name	Parameter	Units	Default	Example
LEVEL	Model index	-	1	
VTO	Zero-bias threshold voltage (V_{T0})	V	0.0	1.0
KP	Transconductance parameter	A/V^2	2.0e-5	3.1e-5
GAMMA	Bulk threshold parameter	$\sqrt{V}$	0.0	0.37
PHI	Surface potential (U)	V	0.6	0.65
LAMBDA	Channel length modulation (MOS1 and MOS2 only) (λ)	$1/V$	0.0	0.02
RD	Drain ohmic resistance	Ω	0.0	1.0
RS	Source ohmic resistance	Ω	0.0	1.0
CBD	Zero-bias B-D junction capacitance	F	0.0	20fF
CBS	Zero-bias B-S junction capacitance	F	0.0	20fF
IS	Bulk junction saturation current (I_S)	A	1.0e-14	1.0e-15
PB	Bulk junction potential	V	0.8	0.87
CGSO	Gate-source overlap capacitance per meter channel width	F/m	0.0	4.0e-11
CGDO	Gate-drain overlap capacitance per meter channel width	F/m	0.0	4.0e-11
CGBO	Gate-bulk overlap capacitance per meter channel width	F/m	0.0	2.0e-11
RSH	Drain and source diffusion sheet resistance	$\Omega/\square$	0.0	10
CJ	Zero-bias bulk junction bottom cap. per sq-meter of junction area	F/m^2	0.0	2.0e-4
MJ	Bulk junction bottom grading coeff.	-	0.5	0.5
CJSW	Zero-bias bulk junction sidewall cap. per meter of junction perimeter	F/m	0.0	1.0e-9
MJSW	Bulk junction sidewall grading coeff.	-	0.50 (level1) 0.33 (level2, 3)	
JS	Bulk junction saturation current			
TOX	Oxide thickness	m	1.0e-7	1.0e-7
NSUB	Substrate doping	cm^{-3}	0.0	4.0e15
NSS	Surface state density	cm^{-2}	0.0	1.0e10
NFS	Fast surface state density	cm^{-2}	0.0	1.0e10

Name	Parameter	Units	Default	Example
TPG	Type of gate material: +1 opp. to substrate, -1 same as substrate, 0 Al gate	-	1.0	
XJ	Metallurgical junction depth	m	0.0	1M
LD	Lateral diffusion	m	0.0	0.8M
UO	Surface mobility	$cm^2/V \cdot sec$	600	700
UCRIT	Critical field for mobility degradation (MOS2 only)	V/cm	1.0e4	1.0e4
UEXP	Critical field exponent in mobility degradation (MOS2 only)	-	0.0	0.1
UTRA	Transverse field coeff. (mobility) (deleted for MOS2)	-	0.0	0.3
VMAX	Maximum drift velocity of carriers	m/s	0.0	5.0e4
NEFF	Total channel-charge (fixed and mobile) coefficient (MOS2 only)	-	1.0	5.0
KF	Flicker noise coefficient	-	0.0	1.0e-26
AF	Flicker noise exponent	-	1.0	1.2
FC	Coefficient for forward-bias depletion capacitance formula	-	0.5	
DELTA	Width effect on threshold voltage (MOS2 and MOS3)	-	0.0	1.0
THETA	Mobility modulation (MOS3 only)	$1/V$	0.0	0.1
ETA	Static feedback (MOS3 only)	-	0.0	1.0
KAPPA	Saturation field factor (MOS3 only)	-	0.2	0.5
TNOM	Parameter measurement temperature	$°C$	27	50

11.2.6 BSIM Models

Ngspice implements many of the BSIM models developed by Berkeley's device group. BSIM stands for Berkeley Short-Channel IGFET Model and groups a class of models that are continuously updated. In general, all parameters of BSIM model are obtained from process characterization, in particular level 4 and level 5 (BSIM1 and BSIM2) parameters are can be generated automatically. J. Pierret [4] describes a means of generating a "process" file, and the program `ngproc2mod` provided with ngspice converts this file into a sequence of BSIM1 "`.model`" lines suitable for inclusion in an ngspice input file.

Parameters marked below with an `*` in the `l/w` column also have corresponding parameters with a length and width dependency. For example, `vfb` is the basic parameter with units of Volts,

and `lvfb` and `wvfb` also exist and have units of Volt-meter.

The formula

$$P = P_0 + \frac{P_L}{L_{\text{effective}}} + \frac{P_W}{W_{\text{effective}}} \tag{11.1}$$

is used to evaluate the parameter for the actual device specified with

$$L_{\text{effective}} = L_{\text{input}} - DL \tag{11.2}$$

$$W_{\text{effective}} = W_{\text{input}} - DW \tag{11.3}$$

Note that unlike the other models in ngspice, the BSIM models are designed for use with a process characterization system that provides all the parameters, thus there are no defaults for the parameters, and leaving one out is considered an error. For an example set of parameters and the format of a process file, see the SPICE2 implementation notes[3]. For more information on BSIM2, see reference [5].

11.2.7 BSIM1 model (level 4)

BSIM1 model (the first is a long series) is an empirical model. Developers placed less emphasis on device physics and based the model on parametrical polynomial equations to model the various physical effects. This approach pays in terms of circuit simulation behavior but the accuracy degrades in the submicron region. A known problem of this model is the negative output conductance and the convergence problems, both related to poor behavior of the polynomial equations.

Ngspice BSIM (level 4) parameters

Name	Parameter	Units	l/w
VFB	Flat-band voltage	V	*
PHI	Surface inversion potential	V	*
K1	Body effect coefficient	$\sqrt{V}$	*
K2	Drain/source depletion charge-sharing coefficient	-	*
ETA	Zero-bias drain-induced barrier-lowering coefficient	-	*
MUZ	Zero-bias mobility	$cm^2/V{\cdot}sec$	
DL	Shortening of channel	μm	
DW	Narrowing of channel	μm	
U0	Zero-bias transverse-field mobility degradation coefficient	$1/V$	*
U1	Zero-bias velocity saturation coefficient	μ/V	*
X2MZ	Sens. of mobility to substrate bias at v=0	$cm^2/V^2{\cdot}sec$	*

Name	Parameter	Units	l/w
X2E	Sens. of drain-induced barrier lowering effect to substrate bias	$1/V$	*
X3E	Sens. of drain-induced barrier lowering effect to drain bias at $V_{ds} = V_{dd}$	$1/V$	*
X2U0	Sens. of transverse field mobility degradation effect to substrate bias	$1/V^2$	*
X2U1	Sens. of velocity saturation effect to substrate bias	$\mu m/V^2$	*
MUS	Mobility at zero substrate bias and at $V_{ds} = V_{dd}$	cm^2/V^2sec	
X2MS	Sens. of mobility to substrate bias at $V_{ds} = V_{dd}$	cm^2/V^2sec	*
X3MS	Sens. of mobility to drain bias at $V_{ds} = V_{dd}$	cm^2/V^2sec	*
X3U1	Sens. of velocity saturation effect on drain bias at Vds=Vdd	$\mu m/V^2$	*
TOX	Gate oxide thickness	μm	
TEMP	Temperature at which parameters were measured	$°C$	
VDD	Measurement bias range	V	
CGDO	Gate-drain overlap capacitance per meter channel width	F/m	
CGSO	Gate-source overlap capacitance per meter channel width	F/m	
CGBO	Gate-bulk overlap capacitance per meter channel length	F/m	
XPART	Gate-oxide capacitance-charge model flag	-	
N0	Zero-bias subthreshold slope coefficient	-	*
NB	Sens. of subthreshold slope to substrate bias	-	*
ND	Sens. of subthreshold slope to drain bias	-	*
RSH	Drain and source diffusion sheet resistance	$\Omega/\square$	
JS	Source drain junction current density	A/m^2	
PB	Built in potential of source drain junction	V	
MJ	Grading coefficient of source drain junction	-	
PBSW	Built in potential of source, drain junction sidewall	V	
MJSW	Grading coefficient of source drain junction sidewall	-	
CJ	Source drain junction capacitance per unit area	F/m^2	
CJSW	source drain junction sidewall capacitance per unit length	F/m	
WDF	Source drain junction default width	m	
DELL	Source drain junction length reduction	m	

`xpart` = 0 selects a 40/60 drain/source charge partition in saturation, while `xpart`=1 selects a 0/100 drain/source charge partition. `nd`, `ng`, and `ns` are the drain, gate, and source nodes, respectively. `mname` is the model name, `area` is the area factor, and `off` indicates an (optional) initial condition on the device for dc analysis. If the area factor is omitted, a value of 1.0 is assumed. The (optional) initial condition specification, using `ic=vds,vgs` is intended for use

with the `uic` option on the `.tran` control line, when a transient analysis is desired starting from other than the quiescent operating point. See the `.ic` control line for a better way to set initial conditions.

11.2.8 BSIM2 model (level 5)

This model contains many improvements over BSIM1 and is suitable for analog simulation. Nevertheless, even BSIM2 breaks transistor operation into several distinct regions and this leads to discontinuities in the first derivative in C-V and I-V characteristics that can cause numerical problems during simulation.

11.2.9 BSIM3 model (levels 8, 49)

BSIM3 solves the numerical problems of previous models with the introduction of smoothing functions. It adopts a single equation to describe device characteristics in the operating regions. This approach eliminates the discontinuities in the I-V and C-V characteristics. The original model, BSIM3 evolved through three versions: BSIM3v1, BSIM3v2 and BSIM3v3. Both BSIM3v1 and BSIM3v2 had suffered from many mathematical problems and were replaced by BSIM3v3. The latter is the only surviving release and has itself a long revision history

The following table summarizes the story of this model:

Release	Date	Notes
BSIM3v3.0	10/30/1995	
BSIM3v3.1	12/09/1996	
BSIM3v3.2	06/16/1998	Two minor revisions available: BSIM3v3.2.1 and BSIM3v3.2.2
BSIM3v3.3	07/29/2005	Parallel processing with OpenMP is available for this model.

BSIM3v2 and 3v3 models has proved for accurate use in 0.18 μm technologies. The model is publicly available in source code form from University of California, Berkeley at

http://www-device.eecs.berkeley.edu/∼bsim3/get.html.

A detailed description is given in the user's manual available at

http://www-device.eecs.berkeley.edu/∼bsim3/ftpv330/Mod_doc/b3v33manu.tar.

We recommend that you use only the most recent BSIM3 model (version 3.3.0), because it contains corrections to all known bugs. To achieve that, change the version parameter in your modelcard files to

```
VERSION = 3.3.0.
```

The older models will not be supported, they are made available for reference only.

11.2.10 BSIM4 model (levels 14, 54)

This is the newest class of the BSIM family and introduces noise modeling and extrinsic parasitics. BSIM4, as the extension of BSIM3 model, addresses the MOSFET physical effects into

sub-100nm regime. It is a physics-based, accurate, scalable, robust and predictive MOSFET SPICE model for circuit simulation and CMOS technology development. It is developed by the BSIM Research Group in the Department of Electrical Engineering and Computer Sciences (EECS) at the University of California, Berkeley (see BSIM4 home page). BSIM4 has a long revision history, which is summarized below.

Release	Date	Notes	Version flag
BSIM4.0.0	03/24/2000		
BSIM4.1.0	10/11/2000		
BSIM4.2.0	04/06/2001		
BSIM4.2.1	10/05/2001	*	4.2.1
BSIM4.3.0	05/09/2003	*	4.3.0
BSIM4.4.0	03/04/2004	*	4.4.0
BSIM4.5.0	07/29/2005	*	4.5.0
BSIM4.6.0	12/13/2006		
...			
BSIM4.6.5	09/09/2009	* **	4.6.5
BSIM4.7.0	04/08/2011	* **	4.7

*) supported in ngspice, using e.g. the `version=<version flag>` flag in the parameter file.

**) Parallel processing using OpenMP support is available for this model.

Details of any revision are to be found in the Berkeley user's manuals, a pdf download of the most recent edition is to be found here.

We recommend that you use only the most recent BSIM4 model (version 4.7.0), because it contains corrections to all known bugs. To achieve that, change the version parameter in your modelcard files to

`VERSION = 4.7.`

The older models will typically not be supported, they are made available for reference only.

11.2.11 EKV model

Level 44 model (EKV) is not available in the standard distribution since it is not released in source form by the EKV group. To obtain the code please refer to the (EKV model home page, EKV group home page). A verilog-A version is available contributed by Ivan Riis Nielsen 11/2006.

11.2.12 BSIMSOI models (levels 10, 58, 55, 56, 57)

BSIMSOI is a SPICE compact model for SOI (Silicon-On-Insulator) circuit design. This model is formulated on top of the BSIM3 framework. It shares the same basic equations with the bulk model so that the physical nature and smoothness of BSIM3v3 are retained. Four models are supported in ngspice, those based on BSIM3 and modeling fully depleted (FD, level 55), partially depleted (PD, level 57) and both (DD, level 56), as well as the modern BSIMSOI version 4 model (levels 10, 58). Detailed descriptions are beyond the scope of this manual, but see e.g. BSIMSOI_4.3.1_Users_manual for a very extensive description of the recent model version. OpenMP support is available for levels 10, 58, version 4.3.1.

11.2.13 SOI3 model (level 60)

see literature citation [18] for a description.

11.2.14 HiSIM models of the University of Hiroshima

There are two model implementations available - see also HiSIM Research Center:

1. HiSIM2 model: Surface-Potential-Based MOSFET Model for Circuit Simulation version 2.5.1 - level 61 (see link to HiSIM2 for source code and manual).
2. HiSIM_HV model: Surface-Potential-Based HV/LD-MOSFET Model for Circuit Simulation version 1.2.2 - level 62 (see link to HiSIM_HV for source code and manual).

Chapter 12

Mixed-Mode and Behavioral Modeling with XSPICE

Ngspice implements XSPICE extensions for behavioral and mixed-mode (analog and digital) modeling. In the XSPICE framework this is referred to as code level modeling. Behavioral modelling may benefit dramatically because XSPICE offers a means to add analog functionality programmed in C. Many examples (amplifiers, oscillators, filters ...) are presented in the following. Even more flexibility is available because you may define your own models and use them in addition and in combination with all the already existing ngspice functionality. Mixed mode simulation is speeded up significantly by simulating the digital part in an event driven manner, in that state equations use only a few allowed states and are evaluated only during switching, and not continuously in time and signal as in a pure analog simulator.

This chapter describes the predefined models available in ngspice, stemming from the original XSPICE simulator. The instructions for writing new code models are given in chapter 27.

To make use of the XSPICE extensions, you need to compile them in. LINUX, CYGWIN, MINGW and other users may add the flag `--enable-xspice` to their `./configure` command and then recompile. The prebuilt ngspice for Windows distribution has XSPICE already enabled. For detailed compiling instructions see chapter 31.1.

12.1 Code Model Element & .MODEL Cards

Ngspice includes a library of predefined "Code Models" that can be placed within any circuit description in a manner similar to that used to place standard device models. Code model instance cards always begin with the letter "A", and always make use of a .MODEL card to describe the code model desired. Section of this document goes into greater detail as to how a code model similar to the predefined models may be developed, but once any model is created and linked into the simulator it may be placed using one instance card and one .MODEL card (note here we conform to the SPICE custom of referring to a single logical line of information as a "card"). As an example, the following uses the predefined "gain" code model which takes as an input some value on node 1, multiplies it by a gain of 5.0, and outputs the new value to node 2. Note that, by convention, input ports are specified first on code models. Output ports follow the inputs.

```
Example:

a1 1 2 amp
.model amp gain(gain=5.0)
```

In this example the numerical values picked up from single-ended (i.e. ground referenced) input node 1 and output to single-ended output node 2 will be voltages, since in the Interface Specification File for this code model (i.e., gain), the default port type is specified as a voltage (more on this later). However, if you didn't know this, the following modifications to the instance card could be used to insure it:

```
Example:

a1 %v(1) %v(2) amp
.model amp gain(gain=5.0)
```

The specification "%v" preceding the input and output node numbers of the instance card indicate to the simulator that the inputs to the model should be single-ended voltage values. Other possibilities exist, as described later.

Some of the other features of the instance and .MODEL cards are worth noting. Of particular interest is the portion of the .MODEL card which specifies `gain=5.0`. This portion of the card assigns a value to a parameter of the "gain" model. There are other parameters which can be assigned values for this model, and in general code models will have several. In addition to numeric values, code model parameters can take non-numeric values (such as TRUE and FALSE), and even vector values. All of these topics will be discussed at length in the following pages. In general, however, the instance and .MODEL cards which define a code model will follow the abstract form described below. This form illustrates that the number of inputs and outputs and the number of parameters which can be specified is relatively open-ended and can be interpreted in a variety of ways (note that angle-brackets "<" and ">" enclose optional inputs):

```
Example:

AXXXXXXX <%v,%i,%vd,%id,%g,%gd,%h,%hd, or %d>
+ <[> <~><%v,%i,%vd,%id,%g,%gd,%h,%hd, or %d>
+ <NIN1 or +NIN1 -NIN1 or "null">
+ <~>...<NIN2.. <]> >
+ <%v,%i,%vd,%id,%g,%gd,%h,%hd,%d or %vname>
+ <[> <~><%v,%i,%vd,%id,%g,%gd,%h,%hd,
      or %d><NOUT1 or +NOUT1 -NOUT1>
+ <~>...<NOUT2.. <]>>
+ MODELNAME

.MODEL MODELNAME MODELTYPE
+ <( PARAMNAME1= <[> VAL1 <VAL2... <]>> PARAMNAME2..>)>
```

Square brackets ([ ]) are used to enclose vector input nodes. In addition, these brackets are used to delineate vectors of parameters.

The literal string “null”, when included in a node list, is interpreted as no connection at that input to the model. "Null" is not allowed as the name of a model’s input or output if the model only has one input or one output. Also, “null” should only be used to indicate a missing connection for a code model; use on other XSPICE component is not interpreted as a missing connection, but will be interpreted as an actual node name.

The tilde, “~”, when prepended to a digital node name, specifies that the logical value of that node be inverted prior to being passed to the code model. This allows for simple inversion of input and output polarities of a digital model in order to handle logically equivalent cases and others that frequently arise in digital system design. The following example defines a NAND gate, one input of which is inverted:

```
a1 [~1 2] 3 nand1
.model nand1 d_nand (rise_delay=0.1 fall_delay=0.2)
```

The optional symbols %v, %i, %vd, etc. specify the type of port the simulator is to expect for the subsequent port or port vector. The meaning of each symbol is given in Table 12.1.

The symbols described in Table 12.1 may be omitted if the default port type for the model is desired. Note that non-default port types for multi-input or multi-output (vector) ports must be specified by placing one of the symbols in front of EACH vector port. On the other hand, if all ports of a vector port are to be declared as having the same non-default type, then a symbol may be specified immediately prior to the opening bracket of the vector. The following examples should make this clear:

```
Example 1: - Specifies two differential voltage connections, one
             to nodes 1 & 2, and one to nodes 3 & 4.

   %vd [1 2 3 4]

Example 2: - Specifies two single-ended connections to node 1 and
             at node 2, and one differential connection to
             nodes 3 & 4.

   %v [1 2 %vd 3 4]

Example 3: - Identical to the previous example...parenthesis
             are added for additional clarity.

   %v [1 2 %vd(3 4)]

Example 4: - Specifies that the node numbers are to be treated in the
             default fashion for the particular model.
             If this model had "%v" as a default for this
             port, then this notation would represent four single-ended
             voltage connections.

   [1 2 3 4]
```

Port Type Modifiers	
Modifier	Interpretation
%v	represents a single-ended voltage port - one node name or number is expected for each port.
%i	represents a single-ended current port - one node name or number is expected for each port.
%g	represents a single-ended voltage-input, current-output (VCCS) port - one node name or number is expected for each port. This type of port is automatically an input/output.
%h	represents a single-ended current-input, voltage-output (CCVS) port - one node name or number is expected for each port. This type of port is automatically an input/output.
%d	represents a digital port - one node name or number is expected for each port. This type of port may be either an input or an output.
%vnam	represents the name of a voltage source, the current through which is taken as an input. This notation is provided primarily in order to allow models defined using SPICE2G6 syntax to operate properly in XSPICE.
%vd	represents a differential voltage port - two node names or numbers are expected for each port.
%id	represents a differential current port - two node names or numbers are expected for each port.
%gd	represents a differential VCCS port - two node names or numbers are expected for each port.
%hd	represents a differential CCVS port - two node names or numbers are expected for each port.

Table 12.1: Port Type Modifiers

The parameter names listed on the .MODEL card must be identical to those named in the code model itself. The parameters for each predefined code model are described in detail in Sections 12.2 (analog), 12.3 (Hybrid, A/D) and 12.4 (digital) . The steps required in order to specify parameters for user-defined models are described in Chapter 27.

The following is a list of instance card and associated .MODEL card examples showing use of predefined models within an XSPICE deck:

```
a1 1 2 amp
.model amp gain(in_offset=0.1 gain=5.0 out_offset=-0.01)
a2 %i[1 2] 3 sum1
.model sum1 summer(in_offset=[0.1 -0.2] in_gain=[2.0 1.0]
+ out_gain=5.0 out_offset=-0.01)
a21 %i[1 %vd(2 5) 7 10] 3 sum2
.model sum2 summer(out_gain=10.0)
a5 1 2 limit5 .model limit5 limit(in_offset=0.1 gain=2.5
+ out_lower.limit=-5.0 out_upper_limit=5.0 limit_domain=0.10
+ fraction=FALSE)
a7 2 %id(4 7) xfer.cntl1
.model xfer_cntl1 pwl(x_array=[-2.0 -1.0 2.0 4.0 5.0]
+ y_array=[-0.2 -0.2 0.1 2.0 10.0]
+ input_domain=0.05 fraction=TRUE)
a8 3 %gd(6 7) switch3
.model switch3 aswitch(cntl_off=0.0 cntl_on=5.0 r_off=1e6
+ r_on=10.0 log=TRUE)
```

12.2 Analog Models

The following analog models are supplied with XSPICE. The descriptions included consist of the model Interface Specification File and a description of the model's operation. This is followed by an example of a simulator-deck placement of the model, including the .MODEL card and the specification of all available parameters.

12.2.1 Gain

```
NAME_TABLE:
C_Function_Name:     cm_gain
Spice_Model_Name:    gain
Description:         "A simple gain block"

PORT_TABLE:
Port Name:           in            out
Description:         "input"       "output"
Direction:           in            out
Default_Type:        v             v
Allowed_Types:       [v,vd,i,id]   [v,vd,i,id]
Vector:              no            no
```

```
Vector.Bounds:      -            -
Null.Allowed:       no           no

PARAMETER_TABLE:
Parameter_Name:     in_offset        gain      out_offset
Description:        "input offset"   "gain"    "output offset"
Data_Type:          real             real      real
Default_Value:      0.0              1.0       0.0
Limits:             -                -         -
Vector:             no               no        no
Vector_Bounds:      -                -         -
Null_Allowed:       yes              yes       yes
```

Description: This function is a simple gain block with optional offsets on the input and the output. The input offset is added to the input, the sum is then multiplied by the gain, and the result is produced by adding the output offset. This model will operate in DC, AC, and Transient analysis modes.

```
Example:


    a1 1 2 amp
    .model amp gain(in_offset=0.1 gain=5.0
    + out_offset=-0.01)
```

12.2.2 Summer

```
NAME_TABLE:
C_Function_Name:    cm_summer
Spice_Model_Name:   summer
Description:        "A summer block"

PORT_TABLE:
Port Name:          in               out
Description:        "input vector"   "output"
Direction:          in               out
Default_Type:       v                v
Allowed_Types:      [v,vd,i,id]      [v,vd,i,id]
Vector:             yes              no
Vector_Bounds:      -                -
Null_Allowed:       no               no

PARAMETER_TABLE:
Parameter_Name:     in_offset                in_gain
Description:        "input offset vector"    "input gain vector"
Data_Type:          real                     real
```

```
Default_Value:      0.0                     1.0
Limits:             -                       -
Vector:             yes                     yes
Vector_Bounds:      in                      in
Null_Allowed:       yes                     yes

PARAMETER_TABLE:
Parameter_Name:     out_gain                out_offset
Description:        "output gain"           "output offset"
Data_Type:          real                    real
Default_Value:      1.0                     0.0
Limits:             -                       -
Vector:             no                      no
Vector_Bounds:      -                       -
Null_Allowed:       yes                     yes
```

Description: This function is a summer block with 2-to-N input ports. Individual gains and offsets can be applied to each input and to the output. Each input is added to its respective offset and then multiplied by its gain. The results are then summed, multiplied by the output gain and added to the output offset. This model will operate in DC, AC, and Transient analysis modes.

Example usage:

```
a2 [1 2] 3 sum1
.model sum1 summer(in_offset=[0.1 -0.2] in_gain=[2.0 1.0]
+ out_gain=5.0 out_offset=-0.01)
```

12.2.3 Multiplier

```
NAME_TABLE:
C_Function_Name:    cm_mult
Spice_Model_Name:   mult
Description:        "multiplier block"
PORT_TABLE:
Port_Name:          in                      out
Description:        "input vector"          "output"
Direction:          in                      out
Default_Type:       v                       v
Allowed_Types:      [v,vd,i,id]             [v,vd,i,id]
Vector:             yes                     no
Vector_Bounds:      [2 -]                   -
Null_Allowed:       no                      no
PARAMETER_TABLE:
Parameter_Name:     in_offset               in_gain
```

```
Description:        "input offset vector"   "input gain vector"
Data_Type:          real                    real
Default_Value:      0.0                     1.0
Limits:             -                       -
Vector:             yes                     yes
Vector_Bounds:      in                      in
Null_Allowed:       yes                     yes
PARAMETER_TABLE:
Parameter_Name:     out_gain                out_offset
Description:        "output gain"           "output offset"
Data_Type:          real                    real
Default_Value:      1.0                     0.0
Limits:             -                       -
Vector:             no                      no
Vector_Bounds:      -                       -
Null_Allowed:       yes                     yes
```

Description: This function is a multiplier block with 2-to-N input ports. Individual gains and offsets can be applied to each input and to the output. Each input is added to its respective offset and then multiplied by its gain. The results are multiplied along with the output gain and are added to the output offset. This model will operate in DC, AC, and Transient analysis modes. However, in ac analysis it is important to remember that results are invalid unless only ONE INPUT of the multiplier is connected to a node which bears an AC signal (this is exemplified by the use of a multiplier to perform a potentiometer function: one input is DC, the other carries the AC signal).

```
Example SPICE Usage:

    a3 [1 2 3] 4 sigmult
    .model sigmult mult(in_offset=[0.1 0.1 -0.1]
    + in_gain=[10.0 10.0 10.0] out_gain=5.0 out_offset=0.05)
```

12.2.4 Divider

```
NAME_TABLE:
C_Function_Name:    cm_divide
Spice_Model_Name:   divide
Description:        "divider block"
PORT_TABLE:
Port_Name:          num                 den                 out
Description:        "numerator"         "denominator"       "output"
Direction:          in                  in                  out
Default_Type:       v                   v                   v
Allowed_Types:      [v,vd,i,id,vnam]    [v,vd,i,id,vnam]    [v,vd,i,id]
Vector:             no                  no                  no
Vector_Bounds:      -                   -                   -
```

```
Null_Allowed:       no                    no                    no
PARAMETER_TABLE:
Parameter_Name:     num_offset            num_gain
Description:        "numerator offset"    "numerator gain"
Data_Type:          real                  real
Default_Value:      0.0                   1.0
Limits:             -                     -
Vector:             no                    no
Vector_Bounds:      -                     -
Null_Allowed:       yes                   yes
PARAMETER_TABLE:
Parameter_Name:     den_offset            den_gain
Description:        "denominator offset"  "denominator gain"
Data_Type:          real                  real
Default_Value:      0.0                   1.0
Limits:             -                     -
Vector:             no                    no
Vector_Bounds:      -                     -
Null_Allowed:       yes                   yes
PARAMETER_TABLE:
Parameter_Name:     den_lower_limit
Description:        "denominator lower limit"
Data_Type:          real
Default_Value:      1.0e-10
Limits:             -
Vector:             no
Vector_Bounds:      -
Null_Allowed:       yes
PARAMETER_TABLE:
Parameter_Name:     den_domain
Description:        "denominator smoothing domain"
Data_Type:          real
Default_Value:      1.0e-10
Limits:             -
Vector:             no
Vector_Bounds:      -
Null_Allowed:       yes
PARAMETER_TABLE:
Parameter_Name:     fraction
Description:        "smoothing fraction/absolute value switch"
Data_Type:          boolean
Default_Value:      false
Limits:             -
Vector:             no
Vector_Bounds:      -
Null_Allowed:       yes
PARAMETER_TABLE:
Parameter_Name:     out_gain              out_offset
```

```
Description:        "output gain"         "output offset"
Data_Type:          real                  real
Default_Value:      1.0                   0.0
Limits:             -                     -
Vector:             no                    no
Vector_Bounds:      -                     -
Null_Allowed:       yes                   yes
```

Description: This function is a two-quadrant divider. It takes two inputs; num (numerator) and den (denominator). Divide offsets its inputs, multiplies them by their respective gains, divides the results, multiplies the quotient by the output gain, and offsets the result. The denominator is limited to a value above zero via a user specified lower limit. This limit is approached through a quadratic smoothing function, the domain of which may be specified as a fraction of the lower limit value (default), or as an absolute value. This model will operate in DC, AC and Transient analysis modes. However, in ac analysis it is important to remember that results are invalid unless only ONE INPUT of the divider is connected to a node which bears an AC signal (this is exemplified by the use of the divider to perform a potentiometer function: one input is DC, the other carries the AC signal).

```
Example SPICE Usage:
a4 1 2 4 divider
.model divider divide(num_offset=0.1 num_gain=2.5 den_offset=-0.1
+ den_gain=5.0 den_lower.limit=1e-5 den_domain=1e-6
+ fraction=FALSE out_gain=1.0 out_offset=0.0)
```

12.2.5 Limiter

```
NAME_TABLE:
C_Function_Name:    cm_limit
Spice_Model_Name:   limit
Description:        "limit block"
PORT_TABLE:
Port Name:          in                    out
Description:        "input"               "output"
Direction:          in                    out
Default_Type:       v                     v
Allowed_Types:      [v,vd,i,id]           [v,vd,i,id]
Vector:             no                    no
Vector_Bounds:      -                     -
Null_Allowed:       no                    no
PARAMETER_TABLE:
Parameter_Name:     in_offset             gain
Description:        "input offset"        "gain"
Data_Type:          real                  real
Default_Value:      0.0                   1.0
Limits:             -                     -
Vector:             no                    no
```

```
Vector_Bounds:      -                     -
Null_Allowed:       yes                   yes
PARAMETER_TABLE:
Parameter_Name:     out_lower_limit       out_upper_limit
Description:        "output lower limit"  "output upper limit"
Data_Type:          real                  real
Default_Value:      0.0                   1.0
Limits:             -                     -
Vector:             no                    no
Vector_Bounds:      -                     -
Null_Allowed:       yes                   yes
PARAMETER_TABLE:
Parameter_Name:     limit_range
Description:        "upper & lower smoothing range"
Data_Type:          real
Default_Value:      1.0e-6
Limits:             -
Vector:             no
Vector_Bounds:      -
Null_Allowed:       yes
PARAMETER_TABLE:
Parameter_Name:     fraction
Description:        "smoothing fraction/absolute value switch"
Data_Type:          boolean
Default_Value:      FALSE
Limits:             -
Vector:             no
Vector_Bounds:      -
Null_Allowed:       yes
```

Description: The Limiter is a single input, single output function similar to the Gain Block. However, the output of the Limiter function is restricted to the range specified by the output lower and upper limits. This model will operate in DC, AC and Transient analysis modes. Note that the limit range is the value BELOW THE UPPER LIMIT AND ABOVE THE LOWER LIMIT at which smoothing of the output begins. For this model, then, the limit range represents the delta WITH RESPECT TO THE OUTPUT LEVEL at which smoothing occurs. Thus, for an input gain of 2.0 and output limits of 1.0 and -1.0 volts, the output will begin to smooth out at ± 0.9 volts, which occurs when the input value is at ± 0.4.

```
Example SPICE Usage:
a5 1 2 limit5
.model limit5 limit(in_offset=0.1 gain=2.5 out_lower_limit=-5.0
+ out_upper_limit=5.0 limit_range=0.10 fraction=FALSE)
```

12.2.6 Controlled Limiter

```
NAME_TABLE:
```

```
C_Function_Name:    cm_climit
Spice_Model_Name:   climit
Description:        "controlled limiter block"
PORT_TABLE:
Port_Name:          in                    cntl_upper
Description:        "input"               "upper lim. control input"
Direction:          in                    in
Default_Type:       v                     v
Allowed_Types:      [v,vd,i,id,vnam]      [v,vd,i,id,vnam]
Vector:             no                    no
Vector_Bounds:      -                     -
Null_Allowed:       no                    no
PORT_TABLE:
Port_Name:          cntl_lower                    out
Description:        "lower limit control input"   "output"
Direction:          in                            out
Default_Type:       v                             v
Allowed_Types:      [v,vd,i,id,vnam]              [v,vd,i,id]
Vector:             no                            no
Vector_Bounds:      -                             -
Null_Allowed:       no                            no
PARAMETER_TABLE:
Parameter_Name:     in_offset             gain
Description:        "input offset"        "gain"
Data_Type:          real                  real
Default_Value:      0.0                   1.0
Limits:             -                     -
Vector:             no                    no
Vector_Bounds:      -                     -
Null_Allowed:       yes                   yes
PARAMETER_TABLE:
Parameter_Name:     upper_delta           lower_delta
Description:        "output upper delta"  "output lower delta"
Data_Type:          real                  real
Default_Value:      0.0                   0.0
Limits:             -                     -
Vector:             no                    no
Vector_Bounds:      -                     -
Null_Allowed:       yes                   yes
PARAMETER_TABLE:
Parameter_Name:     limit_range                   fraction
Description:        "upper & lower sm. range"     "smoothing %/abs switch"
Data_Type:          real                          boolean
Default_Value:      1.0e-6                        FALSE
Limits:             -                             -
Vector:             no                            no
Vector_Bounds:      -                             -
Null_Allowed:       yes                           yes
```

Description: The Controlled Limiter is a single input, single output function similar to the Gain Block. However, the output of the Limiter function is restricted to the range specified by the output lower and upper limits. This model will operate in DC, AC, and Transient analysis modes. Note that the limit range is the value BELOW THE CNTL_UPPER LIMIT AND ABOVE THE CNTL_LOWER LIMIT at which smoothing of the output begins (minimum positive value of voltage must exist between the CNTL_UPPER input and the CNTL_LOWER input at all times). For this model, then, the limit range represents the delta WITH RESPECT TO THE OUTPUT LEVEL at which smoothing occurs. Thus, for an input gain of 2.0 and output limits of 1.0 and -1.0 volts, the output will begin to smooth out at ± 0.9 volts, which occurs when the input value is at ± 0.4. Note also that the Controlled Limiter code tests the input values of cntl_lower and cntl_upper to make sure that they are spaced far enough apart to guarantee the existence of a linear range between them. The range is calculated as the difference between (cntl_upper - upper_delta - limit_range) and (cntl_lower + lower_delta + limit_range) and must be greater than or equal to zero. Note that when the limit range is specified as a fractional value, the limit range used in the above is taken as the calculated fraction of the difference between cntl upper and cntl lower. Still, the potential exists for too great a limit range value to be specified for proper operation, in which case the model will return an error message.

```
Example SPICE Usage:
a6 3 6 8 4 varlimit
.
.
.model varlimit climit(in_offset=0.1 gain=2.5 upper_delta=0.0
+ lower_delta=0.0 limit_range=0.10 fraction=FALSE)
```

12.2.7 PWL Controlled Source

```
NAME_TABLE:
C_Function_Name:    cm_pwl
Spice_Model_Name:   pwl
Description:        "piecewise linear controlled source"
PORT_TABLE:
Port_Name:          in                    out
Description:        "input"               "output"
Direction:          in                    out
Default_Type:       v                     v
Allowed_Types:      [v,vd,i,id,vnam]      [v,vd,i,id]
Vector:             no                    no
Vector_Bounds:      -                     -
Null_Allowed:       no                    no
PARAMETER_TABLE:
Parameter_Name:     x_array               y_array
Description:        "x-element array"     "y-element array"
Data_Type:          real                  real
Default_Value:      -                     -
Limits:             -                     -
Vector:             yes                   yes
```

```
Vector_Bounds:      [2 -]                 [2 -]
Null_Allowed:       no                    no
PARAMETER_TABLE:
Parameter_Name:     input_domain          fraction
Description:        "input sm. domain"    "smoothing %/abs switch"
Data_Type:          real                  boolean
Default_Value:      0.01                  TRUE
Limits:             [1e-12 0.5]           -
Vector:             no                    no
Vector_Bounds:      -                     -
Null_Allowed:       yes                   yes
STATIC_VAR_TABLE:
Static_Var_Name:    last_x_value
Data_Type:          pointer Description:  "iteration holding
                       variable for limiting"
```

Description: The Piece-Wise Linear Controlled Source is a single input, single output function similar to the Gain Block. However, the output of the PWL Source is not necessarily linear for all values of input. Instead, it follows an I/O relationship specified by you via the x_array and y_array coordinates. This is detailed below.

The x_array and y_array values represent vectors of coordinate points on the x and y axes, respectively. The x_array values are progressively increasing input coordinate points, and the associated y_array values represent the outputs at those points. There may be as few as two (x_array[n], y_array[n]) pairs specified, or as many as memory and simulation speed allow. This permits you to very finely approximate a non-linear function by capturing multiple input-output coordinate points.

Two aspects of the PWL Controlled Source warrant special attention. These are the handling of endpoints and the smoothing of the described transfer function near coordinate points.

In order to fully specify outputs for values of "in" outside of the bounds of the PWL function (i.e., less than x_array[0] or greater than x_array[n], where n is the largest user-specified coordinate index), the PWL Controlled Source model extends the slope found between the lowest two coordinate pairs and the highest two coordinate pairs. This has the effect of making the transfer function completely linear for "in" less than x_array[0] and "in" greater than x_array[n]. It also has the potentially subtle effect of unrealistically causing an output to reach a very large or small value for large inputs. You should thus keep in mind that the PWL Source does not inherently provide a limiting capability.

In order to diminish the potential for non-convergence of simulations when using the PWL block, a form of smoothing around the x_array, y_array coordinate points is necessary. This is due to the iterative nature of the simulator and its reliance on smooth first derivatives of transfer functions in order to arrive at a matrix solution. Consequently, the "input_domain" and "fraction" parameters are included to allow you some control over the amount and nature of the smoothing performed.

"Fraction" is a switch that is either TRUE or FALSE. When TRUE (the default setting), the simulator assumes that the specified input domain value is to be interpreted as a fractional figure. Otherwise, it is interpreted as an absolute value. Thus, if fraction=TRUE and input_domain=0.10, The simulator assumes that the smoothing radius about each coordinate point is to be set equal to 10% of the length of either the x_array segment above

each coordinate point, or the x_array segment below each coordinate point. The specific segment length chosen will be the smallest of these two for each coordinate point.
On the other hand, if fraction=FALSE and input=0.10, then the simulator will begin smoothing the transfer function at 0.10 volts (or amperes) below each x_array coordinate and will continue the smoothing process for another 0.10 volts (or amperes) above each x_array coordinate point. Since the overlap of smoothing domains is not allowed, checking is done by the model to ensure that the specified input domain value is not excessive.
One subtle consequence of the use of the fraction=TRUE feature of the PWL Controlled Source is that, in certain cases, you may inadvertently create extreme smoothing of functions by choosing inappropriate coordinate value points. This can be demonstrated by considering a function described by three coordinate pairs, such as (-1,-1), (1,1), and (2,1). In this case, with a 10% input_domain value specified (fraction=TRUE, input domain=0.10), you would expect to see rounding occur between in=0.9 and in=1.1, and nowhere else. On the other hand, if you were to specify the same function using the coordinate pairs (-100,-100), (1,1) and (201,1), you would find that rounding occurs between in=-19 and in=21. Clearly in the latter case the smoothing might cause an excessive divergence from the intended linearity above and below in=1.

```
Example SPICE Usage:
a7 2 4 xfer_cntl1
.
.
.model xfer_cntl1 pwl(x_array=[-2.0 -1.0 2.0 4.0 5.0]
+                     y_array=[-0.2 -0.2 0.1 2.0 10.0]
+                     input_domain=0.05 fraction=TRUE)
```

12.2.8 Filesource

```
NAME_TABLE:
C_Function_Name:       cm_filesource
Spice_Model_Name:      filesource
Description:           "File Source"
PORT_TABLE:
Port_Name:             out
Description:           "output"
Direction:             out
Default_Type:          v
Allowed_Types:         [v,vd,i,id]
Vector:                yes
Vector_Bounds:         [1 -]
Null_Allowed:          no
PARAMETER_TABLE:
Parameter_Name:     timeoffset       timescale
Description:        "time offset"    "timescale"
Data_Type:          real             real
Default_Value:      0.0              1.0
Limits:             -                -
```

```
Vector:             no                no
Vector_Bounds:      -                 -
Null_Allowed:       yes               yes
PARAMETER_TABLE:
Parameter_Name:     timerelative      amplstep
Description:        "relative time"   "step amplitude"
Data_Type:          boolean           boolean
Default_Value:      FALSE             FALSE
Limits:             -                 -
Vector:             no                no
Vector_Bounds:      -                 -
Null_Allowed:       yes               yes
PARAMETER_TABLE:
Parameter_Name:     amploffset        amplscale
Description:        "ampl offset"     "amplscale"
Data_Type:          real              real
Default_Value:      -                 -
Limits:             -                 -
Vector:             yes               yes
Vector_Bounds:      [1 -]             [1 -]
Null_Allowed:       yes               yes
PARAMETER_TABLE:
Parameter_Name:     file
Description:        "file name"
Data_Type:          string
Default_Value:      "filesource.txt"
Limits:             -
Vector:             no
Vector_Bounds:      -
Null_Allowed:       yes
```

Description: The File Source is similar to the Piece-Wise Linear Source, except that the waveform data is read from a file instead of being taken from parameter vectors.
The file format is line oriented ASCII. # and ; are comment characters; all characters from a comment character until the end of the line are ignored.
Each line consists of two or more real values. The first value is the time; subsequent values correspond to the outputs. Values are separated by spaces.
Time values are absolute and must be monotonically increasing, unless timerelative is set to TRUE, in which case the values specify the interval between two samples and must be positive. Waveforms may be scaled and shifted in the time dimension by setting timescale and timeoffset.
Amplitudes can also be scaled and shifted using amplscale and amploffset. Amplitudes are normally interpolated between two samples, unless amplstep is set to TRUE.

```
Example SPICE Usage:
a8 %vd([1 0 2 0]) filesrc
.
```

```
.
.model filesrc filesource (file="sine.m" amploffset=[0 0] amplscale=[1 1]
+                          timeoffset=0 timescale=1
+                          timerelative=false amplstep=false)


Example input file:
# name: sine.m
# two output ports
# column 1: time
# columns 2, 3: values
 0 0 1
 3.90625e-09 0.02454122852291229 0.9996988186962042
 7.8125e-09 0.04906767432741801 0.9987954562051724
 1.171875e-08 0.07356456359966743 0.9972904566786902
 ...
```

12.2.9 multi_input_pwl block

```
NAME_TABLE:
C_Function_Name:    cm_multi_input_pwl
Spice_Model_Name:   multi_input_pwl
Description:        "multi_input_pwl block"
PORT_TABLE:
Port_Name:          in                  out
Description:        "input array"       "output"
Direction:          in                  out
Default_Type:       vd                  vd
Allowed_Types:      [vd,id]             [vd,id]
Vector:             yes                 no
Vector_Bounds:      [2 -]               -
Null_Allowed:       no                  no
PARAMETER_TABLE:
Parameter_Name:     x                   y
Description:        "x array"           "y array"
Data_Type:          real                real
Default_Value:      0.0                 0.0
Limits:             -                   -
Vector:             yes                 yes
Vector_Bounds:      [2 -]               [2 -]
Null_Allowed:       no                  no
PARAMETER_TABLE:
Parameter_Name:     model
Description:        "model type"
Data_Type:          string
Default_Value:      "and"
Limits:             -
Vector:             no
```

```
Vector_Bounds:      -
Null_Allowed:       yes
```

Description: Multi-input gate voltage controlled voltage source that supports **and** or **or** gating. The x's and y's represent the piecewise linear variation of output (y) as a function of input (x). Only one input determines the state of the outputs, seleczable by the parameter `model`. **and**: the smallest value of all the inputs is chosen as the controlling input and determines the output value, **or**: the smallest value of all the inputs is chosen as the controlling input and determines the output value.

```
Example SPICE Usage:
a82 [1 0 2 0 3 0] 7 0 pwlm
.
.
.model pwlm multi_input_pwl((x_array=[-2.0 -1.0 2.0 4.0 5.0]
+                            y_array=[-0.2 -0.2 0.1 2.0 10.0]
+                            model="and")
```

12.2.10 Analog Switch

```
NAME_TABLE:
C_Function_Name:    cm_aswitch
Spice_Model_Name:   aswitch
Description:        "analog switch"
PORT_TABLE:
Port Name:          cntl_in                 out
Description:        "input"                 "resistive output"
Direction:          in                      out
Default_Type:       v                       gd
Allowed_Types:      [v,vd,i,id]             [gd]
Vector:             no                      no
Vector_Bounds:      -                       -
Null_Allowed:       no                      no
PARAMETER_TABLE:
Parameter_Name:     cntl_off                cntl_on
Description:        "control 'off' value"   "control 'on' value"
Data_Type:          real                    real
Default_Value:      0.0                     1.0
Limits:             -                       -
Vector:             no                      no
Vector_Bounds:      -                       -
Null_Allowed:       yes                     yes
PARAMETER_TABLE:
Parameter_Name:     r_off                   log
Description:        "off resistance"        "log/linear switch"
Data_Type:          real                    boolean
Default_Value:      1.0e12                  TRUE
Limits:             -                       -
```

```
Vector:             no                    no
Vector_Bounds:      -                     -
Null_Allowed:       yes                   yes
PARAMETER_TABLE:
Parameter_Name:     r_on
Description:        "on resistance"
Data_Type:          real
Default_Value:      1.0
Limits:             -
Vector:             no
Vector_Bounds:      -
Null_Allowed:       yes
```

Description: The Analog Switch is a resistor that varies either logarithmically or linearly between specified values of a controlling input voltage or current. Note that the input is not internally limited. Therefore, if the controlling signal exceeds the specified OFF state or ON state value, the resistance may become excessively large or excessively small (in the case of logarithmic dependence), or may become negative (in the case of linear dependence). For the experienced user, these excursions may prove valuable for modeling certain devices, but in most cases you are advised to add limiting of the controlling input if the possibility of excessive control value variation exists.

```
Example SPICE Usage:
a8 3 (6 7) switch3
.
.
.model switch3 aswitch(cntl_off=0.0 cntl_on=5.0 r_off=1e6
+                      r_on=10.0 log=TRUE)
```

12.2.11 Zener Diode

```
NAME_TABLE:
C_Function_Name:    cm_zener
Spice_Model_Name:   zener
Description:        "zener diode"
PORT_TABLE:
Port Name:          z
Description:        "zener"
Direction:          inout
Default_Type:       gd
Allowed_Types:      [gd]
Vector:             no
Vector_Bounds:      -
Null_Allowed:       no
PARAMETER_TABLE:
Parameter_Name:     v_breakdown           i_breakdown
Description:        "breakdown voltage"   "breakdown current"
Data_Type:          real                  real
```

```
Default_Value:      -                     2.0e-2
Limits:             [1.0e-6 1.0e6]        [1.0e-9 -]
Vector:             no                    no
Vector_Bounds:      -                     -
Null_Allowed:       no                    yes
PARAMETER_TABLE:
Parameter_Name:     i_sat                 n_forward
Description:        "saturation current"  "forward emission coefficient"
Data_Type:          real                  real
Default_Value:      1.0e-12               1.0
Limits:             [1.0e-15 -]           [0.1 10]
Vector:             no                    no
Vector_Bounds:      -                     -
Null_Allowed:       yes                   yes
PARAMETER_TABLE:
Parameter_Name:     limit_switch
Description:        "switch for on-board limiting (convergence aid)"
Data_Type:          boolean
Default_Value:      FALSE
Limits:             -
Vector:             no
Vector_Bounds:      -
Null_Allowed:       yes
STATIC_VAR_TABLE:
Static_Var_Name:    previous_voltage
Data_Type:          pointer
Description:        "iteration holding variable for limiting"
```

Description: The Zener Diode models the DC characteristics of most zeners. This model differs from the Diode/Rectifier by providing a user-defined dynamic resistance in the reverse breakdown region. The forward characteristic is defined by only a single point, since most data sheets for zener diodes do not give detailed characteristics in the forward region.

The first three parameters define the DC characteristics of the zener in the breakdown region and are usually explicitly given on the data sheet.

The saturation current refers to the relatively constant reverse current that is produced when the voltage across the zener is negative, but breakdown has not been reached. The reverse leakage current determines the slight increase in reverse current as the voltage across the zener becomes more negative. It is modeled as a resistance parallel to the zener with value v breakdown / i rev.

Note that the limit switch parameter engages an internal limiting function for the zener. This can, in some cases, prevent the simulator from converging to an unrealistic solution if the voltage across or current into the device is excessive. If use of this feature fails to yield acceptable results, the convlimit option should be tried (add the following statement to the SPICE input deck: .options convlimit)

```
Example SPICE Usage:
a9 3 4 vref10
```

```
.
.
.model vref10 zener(v_breakdown=10.0 i_breakdown=0.02
+                   r_breakdown=1.0 i_rev=1e-6 i_sat=1e-12)
```

12.2.12 Current Limiter

```
NAME_TABLE:
C_Function_Name:    cm_ilimit
Spice_Model_Name:   ilimit
Description:        "current limiter block"
PORT_TABLE:
Port Name:          in                    pos_pwr
Description:        "input"               "positive power supply"
Direction:          in                    inout
Default_Type:       v                     g
Allowed_Types:      [v,vd]                [g,gd]
Vector:             no                    no
Vector_Bounds:      -                     -
Null_Allowed:       no                    yes
PORT_TABLE:
Port Name:          neg_pwr                  out
Description:        "negative power supply"  "output"
Direction:          inout                    inout
Default_Type:       g                        g
Allowed_Types:      [g,gd]                   [g,gd]
Vector:             no                       no
Vector_Bounds:      -                        -
Null_Allowed:       yes                      no
PARAMETER_TABLE:
Parameter_Name:     in_offset                gain
Description:        "input offset"           "gain"
Data_Type:          real                     real
Default_Value:      0.0                      1.0
Limits:             -                        -
Vector:             no                       no
Vector_Bounds:      -                        -
Null_Allowed:       yes                      yes
PARAMETER_TABLE:
Parameter_Name:     r_out_source             r_out_sink
Description:        "sourcing resistance"    "sinking resistance"
Data_Type:          real                     real
Default_Value:      1.0                      1.0
Limits:             [1.0e-9 1.0e9]           [1.0e-9 1.0e9]
Vector:             no                       no
Vector_Bounds:      -                        -
Null_Allowed:       yes                      yes
PARAMETER_TABLE:
```

```
Parameter_Name:     i_limit_source
Description:        "current sourcing limit"
Data_Type:          real
Default_Value:      -
Limits:             [1.0e-12 -]
Vector:             no
Vector_Bounds:      -
Null_Allowed:       yes
PARAMETER_TABLE:
Parameter_Name:     i_limit_sink
Description:        "current sinking limit"
Data_Type:          real
Default_Value:      -
Limits:             [1.0e-12 -]
Vector:             no
Vector_Bounds:      -
Null_Allowed:       yes
PARAMETER_TABLE:
Parameter_Name:     v_pwr_range              i_source_range
Description:        "upper & lower power     "sourcing current
                     supply smoothing range"  smoothing range"
Data_Type:          real                     real
Default_Value:      1.0e-6                   1.0e-9
Limits:             [1.0e-15 -]              [1.0e-15 -]
Vector:             no                       no
Vector_Bounds:      -                        -
Null_Allowed:       yes                      yes
PARAMETER_TABLE:
Parameter_Name:     i_sink_range
Description:        "sinking current smoothing range"
Data_Type:          real
Default_Value:      1.0e-9
Limits:             [1.0e-15 -]
Vector:             no
Vector_Bounds:      -
Null_Allowed:       yes
PARAMETER_TABLE:
Parameter_Name:     r_out_domain
Description:        "internal/external voltage delta smoothing range"
Data_Type:          real
Default_Value:      1.0e-9
Limits:             [1.0e-15 -]
Vector:             no
Vector_Bounds:      -
Null_Allowed:       yes
```

Description: The Current Limiter models the behavior of an operational amplifier or comparator device at a high level of abstraction. All of its pins act as inputs; three of the four

also act as outputs. The model takes as input a voltage value from the "in" connector. It then applies an offset and a gain, and derives from it an equivalent internal voltage (veq), which it limits to fall between pos pwr and neg pwr. If veq is greater than the output voltage seen on the "out" connector, a sourcing current will flow from the output pin. Conversely, if the voltage is less than vout, a sinking current will flow into the output pin. Depending on the polarity of the current flow, either a sourcing or a sinking resistance value (r_out_source, r_out_sink) is applied to govern the vout/i_out relationship. The chosen resistance will continue to control the output current until it reaches a maximum value specified by either i_limit_source or i_limit_sink. The latter mimics the current limiting behavior of many operational amplifier output stages.
During all operation, the output current is reflected either in the pos_pwr connector current or the neg_pwr current, depending on the polarity of i_out. Thus, realistic power consumption as seen in the supply rails is included in the model.
The user-specified smoothing parameters relate to model operation as follows: v_pwr_range controls the voltage below vpos_pwr and above vneg_pwr inputs beyond which veq [= gain * (vin + voffset)] is smoothed; i_source_range specifies the current below i_limit_source at which smoothing begins, as well as specifying the current increment above i_out=0.0 at which i_pos_pwr begins to transition to zero; i_sink_range serves the same purpose with respect to i_limit_sink and i_neg_pwr that i_source_range serves for i_limit_source & i_pos_pwr; r_out_domain specifies the incremental value above and below (veq-vout)=0.0 at which r_out will be set to r_out_source and r_out_sink, respectively. For values of (veq- vout) less than r_out_domain and greater than -r_out_domain, r_out is interpolated smoothly between r_out_source & r_out_sink.

```
Example SPICE Usage:
a10 3 10 20 4 amp3
.
.
.model amp3 ilimit(in_offset=0.0 gain=16.0 r_out_source=1.0
+                  r_out_sink=1.0 i_limit_source=1e-3
+                  i_limit_sink=10e-3 v_pwr_range=0.2
+                  i_source_range=1e-6 i_sink_range=1e-6
+                  r_out_domain=1e-6)
```

12.2.13 Hysteresis Block

```
NAME_TABLE:
C_Function_Name:    cm_hyst
Spice_Model_Name:   hyst
Description:        "hysteresis block"
PORT_TABLE:
Port Name:          in                    out
Description:        "input"               "output"
Direction:          in                    out
Default_Type:       v                     v
Allowed_Types:      [v,vd,i,id]           [v,vd,i,id]
Vector:             no                    no
Vector_Bounds:      -                     -
```

```
Null_Allowed:       no                    no
PARAMETER_TABLE:
Parameter_Name:     in_low                in_high
Description:        "input low value"     "input high value"
Data_Type:          real                  real
Default_Value:      0.0                   1.0
Limits:             -                     -
Vector:             no                    no
Vector_Bounds:      -                     -
Null_Allowed:       yes                   yes
PARAMETER_TABLE:
Parameter_Name:     hyst                  out_lower_limit
Description:        "hysteresis"          "output lower limit"
Data_Type:          real                  real
Default_Value:      0.1                   0.0
Limits:             [0.0 -]               -
Vector:             no                    no
Vector_Bounds:      -                     -
Null_Allowed:       yes                   yes
PARAMETER_TABLE:
Parameter_Name:     out_upper_limit       input_domain
Description:        "output upper limit"  "input smoothing domain"
Data_Type:          real                  real
Default_Value:      1.0                   0.01
Limits:             -                     -
Vector:             no                    no
Vector_Bounds:      -                     -
Null_Allowed:       yes                   yes
PARAMETER_TABLE:
Parameter_Name:     fraction
Description:        "smoothing fraction/absolute value switch"
Data_Type:          boolean
Default_Value:      TRUE
Limits:             -
Vector:             no
Vector_Bounds:      -
Null_Allowed:       yes
```

Description: The Hysteresis block is a simple buffer stage that provides hysteresis of the output with respect to the input. The in low and in high parameter values specify the center voltage or current inputs about which the hysteresis effect operates. The output values are limited to out lower limit and out upper limit. The value of "hyst" is added to the in low and in high points in order to specify the points at which the slope of the hysteresis function would normally change abruptly as the input transitions from a low to a high value. Likewise, the value of "hyst" is subtracted from the in high and in low values in order to specify the points at which the slope of the hysteresis function would normally change abruptly as the input transitions from a high to a low value. In fact, the slope of the hysteresis function is never allowed to change abruptly but is smoothly varied whenever the input domain smoothing parameter is set greater than zero.

```
Example SPICE Usage:
a11 1 2 schmitt1
.
.
.model schmitt1 hyst(in_low=0.7 in_high=2.4 hyst=0.5
+                    out_lower_limit=0.5 out_upper_limit=3.0
+                    input_domain=0.01 fraction=TRUE)
```

12.2.14 Differentiator

```
NAME_TABLE:
C_Function_Name:    cm_d_dt
Spice_Model_Name:   d_dt
Description:        "time-derivative block"
PORT_TABLE:
Port Name:          in                      out
Description:        "input"                 "output"
Direction:          in                      out
Default_Type:       v                       v
Allowed_Types:      [v,vd,i,id]             [v,vd,i,id]
Vector:             no                      no
Vector_Bounds:      -                       -
Null_Allowed:       no                      no
PARAMETER_TABLE:
Parameter_Name:     gain                    out_offset
Description:        "gain"                  "output offset"
Data_Type:          real                    real
Default_Value:      1.0                     0.0
Limits:             -                       -
Vector:             no                      no
Vector_Bounds:      -                       -
Null_Allowed:       yes                     yes
PARAMETER_TABLE:
Parameter_Name:     out_lower_limit         out_upper_limit
Description:        "output lower limit"    "output upper limit"
Data_Type:          real                    real
Default_Value:      -                       -
Limits:             -                       -
Vector:             no                      no
Vector_Bounds:      -                       -
Null_Allowed:       yes                     yes
PARAMETER_TABLE:
Parameter_Name:     limit_range
Description:        "upper & lower limit smoothing range"
Data_Type:          real
Default_Value:      1.0e-6
Limits:             -
Vector:             no
```

```
Vector_Bounds:      -
Null_Allowed:       yes
```

Description: The Differentiator block is a simple derivative stage that approximates the time derivative of an input signal by calculating the incremental slope of that signal since the previous time point. The block also includes gain and output offset parameters to allow for tailoring of the required signal, and output upper and lower limits to prevent convergence errors resulting from excessively large output values. The incremental value of output below the output upper limit and above the output lower limit at which smoothing begins is specified via the limit range parameter. In AC analysis, the value returned is equal to the radian frequency of analysis multiplied by the gain.
Note that since truncation error checking is not included in the d_dt block, it is not recommended that the model be used to provide an integration function through the use of a feedback loop. Such an arrangement could produce erroneous results. Instead, you should make use of the "integrate" model, which does include truncation error checking for enhanced accuracy.

```
Example SPICE Usage:
a12 7 12 slope_gen
.
.
.model slope_gen d_dt(out_offset=0.0 gain=1.0
+                     out_lower_limit=1e-12 out_upper_limit=1e12
+                     limit_range=1e-9)
```

12.2.15 Integrator

```
NAME_TABLE:
C_Function_Name:    cm_int
Spice_Model_Name:   int
Description:        "time-integration block"
PORT_TABLE:
Port Name:          in                    out
Description:        "input"               "output"
Direction:          in                    out
Default_Type:       v                     v
Allowed_Types:      [v,vd,i,id]           [v,vd,i,id]
Vector:             no                    no
Vector_Bounds:      -                     -
Null_Allowed:       no                    no
PARAMETER_TABLE:
Parameter_Name:     in_offset             gain
Description:        "input offset"        "gain"
Data_Type:          real                  real
Default_Value:      0.0                   1.0
Limits:             -                     -
Vector:             no                    no
Vector_Bounds:      -                     -
```

```
Null_Allowed:       yes                   yes
PARAMETER_TABLE:
Parameter_Name:     out_lower_limit       out_upper_limit
Description:        "output lower limit"  "output upper limit"
Data_Type:          real                  real
Default_Value:      -                     -
Limits:             -                     -
Vector:             no                    no
Vector_Bounds:      -                     -
Null_Allowed:       yes                   yes
PARAMETER_TABLE:
Parameter_Name:     limit_range
Description:        "upper & lower limit smoothing range"
Data_Type:          real
Default_Value:      1.0e-6
Limits:             -
Vector:             no
Vector_Bounds:      -
Null_Allowed:       yes
PARAMETER_TABLE:
Parameter_Name:     out_ic
Description:        "output initial condition"
Data_Type:          real
Default_Value:      0.0
Limits:             -
Vector:             no
Vector_Bounds:      -
Null_Allowed:       yes
```

Description: The Integrator block is a simple integration stage that approximates the integral with respect to time of an input signal. The block also includes gain and input offset parameters to allow for tailoring of the required signal, and output upper and lower limits to prevent convergence errors resulting from excessively large output values. Note that these limits specify integrator behavior similar to that found in an operational amplifier-based integration stage, in that once a limit is reached, additional storage does not occur. Thus, the input of a negative value to an integrator which is currently driving at the out upper limit level will immediately cause a drop in the output, regardless of how long the integrator was previously summing positive inputs. The incremental value of output below the output upper limit and above the output lower limit at which smoothing begins is specified via the limit range parameter. In AC analysis, the value returned is equal to the gain divided by the radian frequency of analysis.

Note that truncation error checking is included in the "int" block. This should provide for a more accurate simulation of the time integration function, since the model will inherently request smaller time increments between simulation points if truncation errors would otherwise be excessive.

```
Example SPICE Usage:
a13 7 12 time_count
```

```
.
.
.model time_count int(in_offset=0.0 gain=1.0
+                      out_lower_limit=-1e12 out_upper_limit=1e12
+                      limit_range=1e-9 out_ic=0.0)
```

12.2.16 S-Domain Transfer Function

```
NAME_TABLE:
C_Function_Name:    cm_s_xfer
Spice_Model_Name:   s_xfer
Description:        "s-domain transfer function"
PORT_TABLE:
Port Name:          in                      out
Description:        "input"                 "output"
Direction:          in                      out
Default_Type:       v                       v
Allowed_Types:      [v,vd,i,id]             [v,vd,i,id]
Vector:             no                      no
Vector_Bounds:      -                       -
Null_Allowed:       no                      no
PARAMETER_TABLE:
Parameter_Name:     in_offset               gain
Description:        "input offset"          "gain"
Data_Type:          real                    real
Default_Value:      0.0                     1.0
Limits:             -                       -
Vector:             no                      no
Vector_Bounds:      -                       -
Null_Allowed:       yes                     yes
PARAMETER_TABLE:
Parameter_Name:     num_coeff
Description:        "numerator polynomial coefficients"
Data_Type:          real
Default_Value:      -
Limits:             -
Vector:             yes
Vector_Bounds:      [1 -]
Null_Allowed:       no
PARAMETER_TABLE:
Parameter_Name:     den_coeff
Description:        "denominator polynomial coefficients"
Data_Type:          real
Default_Value:      -
Limits:             -
Vector:             yes
Vector_Bounds:      [1 -]
Null_Allowed:       no
```

```
PARAMETER_TABLE:
Parameter_Name:     int_ic
Description:        "integrator stage initial conditions"
Data_Type:          real
Default_Value:      0.0
Limits:             -
Vector:             yes
Vector_Bounds:      den_coeff
Null_Allowed:       yes
PARAMETER_TABLE:
Parameter_Name:     denormalized_freq
Description:        "denorm. corner freq.(radians) for 1 rad/s coeffs"
Data_Type:          real
Default_Value:      1.0
Limits:             -
Vector:             no
Vector_Bounds:      -
Null_Allowed:       yes
```

Description: The s-domain transfer function is a single input, single output transfer function in the Laplace transform variable "s" that allows for flexible modulation of the frequency domain characteristics of a signal. Ac and transient simulations are supported. The code model may be configured to produce an arbitrary s-domain transfer function with the following restrictions:

```
1. The degree of the numerator polynomial cannot exceed that
   of the denominator polynomial in the variable "s".
2. The coefficients for a polynomial must be stated
   explicitly. That is, if a coefficient is zero, it must be
   included as an input to the num coeff or den coeff vector.
```

The order of the coefficient parameters is from that associated with the highest-powered term decreasing to that of the lowest. Thus, for the coefficient parameters specified below, the equation in "s" is shown:

```
.model filter s_xfer(gain=0.139713 int_ic=[0 0 0]
+ num_coeff=[1.0 0.0 0.07464102]
+ den_coeff=[1.0 0.998942 0.01170077])
              ...specifies a transfer function of the form...
```

$$N(s) = 0.139713 \cdot \{\frac{s^2+0.7464102}{s^2+0.998942s+0.00117077}\}$$

The s-domain transfer function includes **gain** and **in_offset** (input offset) parameters to allow for tailoring of the required signal. There are no limits on the internal signal values or on the output value of the s-domain transfer function, so you are cautioned to specify gain and coefficient values that will not cause the model to produce excessively large values. In AC

analysis, the value returned is equal to the real and imaginary components of the total s-domain transfer function at each frequency of interest.

The **denormalized_freq** term allows you to specify coefficients for a normalized filter (i.e. one in which the frequency of interest is 1 rad/s). Once these coefficients are included, specifying the denormalized frequency value "shifts" the corner frequency to the actual one of interest. As an example, the following transfer function describes a Chebyshev low-pass filter with a corner (pass-band) frequency of 1 rad/s:

$$N(s) = 0.139713 \cdot \{\frac{1.0}{s^2+1.09773s+1.10251}\}$$

In order to define an s_xfer model for the above, but with the corner frequency equal to 1500 rad/s (9425 Hz), the following instance and model lines would be needed:

```
a12 node1 node2 cheby1
.model cheby1 s_xfer(num_coeff=[1] den_coeff=[1 1.09773 1.10251]
+                    int_ic=[0 0 0] denormalized_freq=1500)
```

In the above, you add the normalized coefficients and scale the filter through the use of the denormalized freq parameter. Similar results could have been achieved by performing the denormalization prior to specification of the coefficients, and setting denormalized freq to the value 1.0 (or not specifying the frequency, as the default is 1.0 rad/s) Note in the above that frequencies are ALWAYS SPECIFIED AS RADIANS/SECOND.

Truncation error checking is included in the s-domain transfer block. This should provide for more accurate simulations, since the model will inherently request smaller time increments between simulation points if truncation errors would otherwise be excessive.

The **int_ic** parameter is an array that must be of the same size as the array of values specified for the **den_coeff** parameter. Even if a 0 start value is required, you have to add the specific int_ic vector to the set of coefficients (see the examples above and below).

```
Example SPICE Usage:
a14 9 22 cheby_LP_3KHz
.
.
.model cheby_LP_3KHz s_xfer(in_offset=0.0 gain=1.0 int_ic=[0 0 0]
+                           num_coeff=[1.0]
+                           den_coeff=[1.0 1.42562 1.51620])
```

12.2.17 Slew Rate Block

```
NAME_TABLE:
C_Function_Name:    cm_slew
Spice_Model_Name:   slew
Description:        "A simple slew rate follower block"
PORT_TABLE:
Port Name:          in                    out
Description:        "input"               "output"
```

```
Direction:          in                    out
Default_Type:       v                     v
Allowed_Types:      [v,vd,i,id]           [v,vd,i,id]
Vector:             no                    no
Vector_Bounds:      -                     -
Null_Allowed:       no                    no
PARAMETER_TABLE:
Parameter_Name:     rise_slope
Description:        "maximum rising slope value"
Data_Type:          real
Default_Value:      1.0e9
Limits:             -
Vector:             no
Vector_Bounds:      -
Null_Allowed:       yes
PARAMETER_TABLE:
Parameter_Name:     fall_slope
Description:        "maximum falling slope value"
Data_Type:          real
Default_Value:      1.0e9
Limits:             -
Vector:             no
Vector_Bounds:      -
Null_Allowed:       yes
PARAMETER_TABLE:
Parameter_Name:     range
Description:        "smoothing range"
Data_Type:          real
Default_Value:      0.1
Limits:             -
Vector:             no
Vector_Bounds:      -
Null_Allowed:       yes
```

Description: This function is a simple slew rate block that limits the absolute slope of the output with respect to time to some maximum or value. The actual slew rate effects of over-driving an amplifier circuit can thus be accurately modeled by cascading the amplifier with this model. The units used to describe the maximum rising and falling slope values are expressed in volts or amperes per second. Thus a desired slew rate of 0.5 V/μs will be expressed as 0.5e+6, etc.

The slew rate block will continue to raise or lower its output until the difference between the input and the output values is zero. Thereafter, it will resume following the input signal, unless the slope again exceeds its rise or fall slope limits. The range input specifies a smoothing region above or below the input value. Whenever the model is slewing and the output comes to within the input + or - the range value, the partial derivative of the output with respect to the input will begin to smoothly transition from 0.0 to 1.0. When the model is no longer slewing (output = input), dout/din will equal 1.0.

```
Example SPICE Usage:
```

```
a15 1 2 slew1
.model slew1 slew(rise_slope=0.5e6 fall_slope=0.5e6)
```

12.2.18 Inductive Coupling

```
NAME_TABLE:
C_Function_Name:    cm_lcouple
Spice_Model_Name:   lcouple
Description:        "inductive coupling (for use with 'core' model)"
PORT_TABLE:
Port_Name:          l                       mmf_out
Description:        "inductor"              "mmf output (in ampere-turns)"
Direction:          inout                   inout
Default_Type:       hd                      hd
Allowed_Types:      [h,hd]                  [hd]
Vector:             no                      no
Vector_Bounds:      -                       -
Null_Allowed:       no                      no
PARAMETER_TABLE:
Parameter_Name:     num_turns
Description:        "number of inductor turns"
Data_Type:          real
Default_Value:      1.0
Limits:             -
Vector:             no
Vector_Bounds:      -
Null_Allowed:       yes
```

Description: This function is a conceptual model which is used as a building block to create a wide variety of inductive and magnetic circuit models. This function is normally used in conjunction with the "core" model, but can also be used with resistors, hysteresis blocks, etc. to build up systems which mock the behavior of linear and nonlinear components.
The lcouple takes as an input (on the "l" port) a current. This current value is multiplied by the num_turns value, N, to produce an output value (a voltage value which appears on the mmf_out port). The mmf_out acts similar to a magnetomotive force in a magnetic circuit; when the lcouple is connected to the "core" model, or to some other resistive device, a current will flow. This current value (which is modulated by whatever the lcouple is connected to) is then used by the lcouple to calculate a voltage "seen" at the "l" port. The voltage is a function of the derivative with respect to time of the current value seen at mmf_out.
The most common use for lcouples will be as a building block in the construction of transformer models. To create a transformer with a single input and a single output, you would require two lcouple models plus one "core" model. The process of building up such a transformer is described under the description of the "core" model, below.

```
Example SPICE Usage:
a150 (7 0) (9 10) lcouple1
.model lcouple1 lcouple(num_turns=10.0)
```

12.2.19 Magnetic Core

```
NAME_TABLE:
C_Function_Name:    cm_core
Spice_Model_Name:   core
Description:        "magnetic core"
PORT_TABLE:
Port_Name:          mc
Description:        "magnetic core"
Direction:          inout
Default_Type:       gd
Allowed_Types:      [g,gd]
Vector: no
Vector_Bounds:      -
Null_Allowed:       no
PARAMETER_TABLE:
Parameter_Name:     H_array                 B_array
Description:        "magnetic field array"  "flux density array"
Data_Type:          real                    real
Default_Value:      -                       -
Limits:             -                       -
Vector:             yes                     yes
Vector_Bounds:      [2 -]                   [2 -]
Null_Allowed:       no                      no
PARAMETER_TABLE:
Parameter_Name:     area                    length
Description:        "cross-sectional area"  "core length"
Data_Type:          real                    real
Default_Value:      -                       -
Limits:             -                       -
Vector:             no                      no
Vector_Bounds:      -                       -
Null_Allowed:       no                      no
PARAMETER_TABLE:
Parameter_Name:     input_domain
Description:        "input sm. domain"
Data_Type:          real
Default_Value:      0.01
Limits:             [1e-12 0.5]
Vector:             no
Vector_Bounds:      -
Null_Allowed:       yes
PARAMETER_TABLE:
Parameter_Name:     fraction
Description:        "smoothing fraction/abs switch"
Data_Type:          boolean
Default_Value:      TRUE
Limits:             -
Vector:             no
```

```
Vector_Bounds:      -
Null_Allowed:       yes
PARAMETER_TABLE:
Parameter_Name:     mode
Description:        "mode switch (1 = pwl, 2 = hyst)"
Data_Type:          int
Default_Value:      1
Limits:             [1 2]
Vector:             no
Vector_Bounds:      -
Null_Allowed:       yes
PARAMETER_TABLE:
Parameter_Name:     in_low                  in_high
Description:        "input low value"       "input high value"
Data_Type:          real                    real
Default_Value:      0.0                     1.0
Limits:             -                       -
Vector:             no                      no
Vector_Bounds:      -                       -
Null_Allowed:       yes                     yes
PARAMETER_TABLE:
Parameter_Name:     hyst                    out_lower_limit
Description:        "hysteresis"            "output lower limit"
Data_Type:          real                    real
Default_Value:      0.1                     0.0
Limits:             [0 -]                   -
Vector:             no                      no
Vector_Bounds:      -                       -
Null_Allowed:       yes                     yes
PARAMETER_TABLE:
Parameter_Name:     out_upper_limit
Description:        "output upper limit"
Data_Type:          real
Default_Value:      1.0
Limits:             -
Vector:             no
Vector_Bounds:      -
Null_Allowed:       yes
```

Description: This function is a conceptual model which is used as a building block to create a wide variety of inductive and magnetic circuit models. This function is almost always expected to be used in conjunction with the "lcouple" model to build up systems which mock the behavior of linear and nonlinear magnetic components. There are two fundamental modes of operation for the core model. These are the pwl mode (which is the default, and which is the most likely to be of use to you) and the hysteresis mode. These are detailed below.

PWL Mode (mode = 1)

The core model in PWL mode takes as input a voltage which it treats as a magnetomotive force (mmf) value. This value is divided by the total effective length of the core to produce a value for the Magnetic Field Intensity, H. This value of H is then used to find the corresponding Flux Density, B, using the piecewise linear relationship described by you in the H array / B array coordinate pairs. B is then multiplied by the cross-sectional area of the core to find the Flux value, which is output as a current. The pertinent mathematical equations are listed below:

H = mmf =L, where L = Length

Here H, the Magnetic Field Intensity, is expressed in ampere-turns/meter.

B = f (H)

The B value is derived from a piecewise linear transfer function described to the model via the (H_array[],B_array[]) parameter coordinate pairs. This transfer function does not include hysteretic effects; for that, you would need to substitute a HYST model for the core.

ϕ = BA, where A = Area

The final current allowed to flow through the core is equal to ϕ. This value in turn is used by the "lcouple" code model to obtain a value for the voltage reflected back across its terminals to the driving electrical circuit.

The following example code shows the use of two “lcouple” models and one core model to produce a simple primary/secondary transformer.

```
Example SPICE Usage:
a1 (2 0) (3 0) primary
.model primary lcouple (num_turns = 155)
a2 (3 4) iron_core
.model iron_core core (H_array = [-1000 -500 -375 -250 -188 -125 -63 0
+                                 63 125 188 250 375 500 1000]
+                      B_array = [-3.13e-3 -2.63e-3 -2.33e-3 -1.93e-3
+                                 -1.5e-3 -6.25e-4 -2.5e-4 0 2.5e-4
+                                 6.25e-4 1.5e-3 1.93e-3 2.33e-3
+                                 2.63e-3 3.13e-3]
+                      area = 0.01 length = 0.01)
a3 (5 0) (4 0) secondary
.model secondary lcouple (num_turns = 310)
```

HYSTERESIS Mode (mode = 2)

The core model in HYSTERESIS mode takes as input a voltage which it treats as a magnetomotive force (mmf) value. This value is used as input to the equivalent of a hysteresis code model block. The parameters defining the input low and high values, the output low and high values, and the amount of hysteresis are as in that model. The output from this mode, as in PWL mode, is a current value which is seen across the mc port. An example of the core model used in this fashion is shown below:

```
Example SPICE Usage:
a1 (2 0) (3 0) primary
.model primary lcouple (num_turns = 155)
a2 (3 4) iron_core
.model iron_core core (mode = 2 in_low=-7.0 in_high=7.0
+                      out_lower_limit=-2.5e-4 out_upper_limit=2.5e-4
+                      hyst = 2.3 )
a3 (5 0) (4 0) secondary
.model secondary lcouple (num_turns = 310)
```

One final note to be made about the two core model nodes is that certain parameters are available in one mode, but not in the other. In particular, the in_low, in_high, out_lower_limit, out_upper_limit, and hysteresis parameters are not available in PWL mode. Likewise, the H_array, B_array, area, and length values are unavailable in HYSTERESIS mode. The input domain and fraction parameters are common to both modes (though their behavior is somewhat different; for explanation of the input domain and fraction values for the HYSTERESIS mode, you should refer to the hysteresis code model discussion).

12.2.20 Controlled Sine Wave Oscillator

```
NAME_TABLE:
C_Function_Name:    cm_sine
Spice_Model_Name:   sine
Description:        "controlled sine wave oscillator"
PORT_TABLE:
Port Name:          cntl_in                 out
Description:        "control input"         "output"
Direction:          in                      out
Default_Type:       v                       v
Allowed_Types:      [v,vd,i,id]             [v,vd,i,id]
Vector:             no                      no
Vector_Bounds:      -                       -
Null_Allowed:       no                      no
PARAMETER_TABLE:
Parameter_Name:     cntl_array              freq_array
Description:        "control array"         "frequency array"
Data_Type:          real                    real
Default_Value:      0.0                     1.0e3
Limits:             -                       [0 -]
Vector:             yes                     yes
Vector_Bounds:      [2 -]                   cntl_array
Null_Allowed:       no                      no
PARAMETER_TABLE:
Parameter_Name:     out_low                 out_high
Description:        "output peak low value" "output peak high value"
Data_Type:          real                    real
Default_Value:      -1.0                    1.0
Limits:             -                       -
```

```
Vector:             no                      no
Vector_Bounds:      -                       -
Null_Allowed:       yes                     yes
```

Description: This function is a controlled sine wave oscillator with parameterizable values of low and high peak output. It takes an input voltage or current value. This value is used as the independent variable in the piecewise linear curve described by the coordinate points of the cntl array and freq array pairs. From the curve, a frequency value is determined, and the oscillator will output a sine wave at that frequency. From the above, it is easy to see that array sizes of 2 for both the cntl array and the freq array will yield a linear variation of the frequency with respect to the control input. Any sizes greater than 2 will yield a piecewise linear transfer characteristic. For more detail, refer to the description of the piecewise linear controlled source, which uses a similar method to derive an output value given a control input.

```
Example SPICE Usage:
asine 1 2 in_sine
.model in_sine sine(cntl_array = [-1 0 5 6]
+                   freq_array=[10 10 1000 1000] out_low = -5.0
+                   out_high = 5.0)
```

12.2.21 Controlled Triangle Wave Oscillator

```
NAME_TABLE:
C_Function_Name:    cm_triangle
Spice_Model_Name:   triangle
Description:        "controlled triangle wave oscillator"
PORT_TABLE:
Port Name:          cntl_in                 out
Description:        "control input"         "output"
Direction:          in                      out
Default_Type:       v                       v
Allowed_Types:      [v,vd,i,id]             [v,vd,i,id]
Vector:             no                      no
Vector_Bounds:      -                       -
Null_Allowed:       no                      no
PARAMETER_TABLE:
Parameter_Name:     cntl_array              freq_array
Description:        "control array"         "frequency array"
Data_Type:          real                    real
Default_Value:      0.0                     1.0e3
Limits:             -                       [0 -]
Vector:             yes                     yes
Vector_Bounds:      [2 -]                   cntl_array
Null_Allowed:       no                      no
PARAMETER_TABLE:
Parameter_Name:     out_low                 out_high
Description:        "output peak low value" "output peak high value"
```

```
Data_Type:          real                    real
Default_Value:      -1.0                    1.0
Limits:             -                       -
Vector:             no                      no
Vector_Bounds:      -                       -
Null_Allowed:       yes                     yes
PARAMETER_TABLE:
Parameter_Name:     rise_duty
Description:        "rise time duty cycle"
Data_Type:          real
Default_Value:      0.5
Limits:             [1e-10 0.999999999]
Vector:             no
Vector_Bounds:      -
Null_Allowed:       yes
```

Description: This function is a controlled triangle/ramp wave oscillator with parametrizable values of low and high peak output and rise time duty cycle. It takes an input voltage or current value. This value is used as the independent variable in the piecewise linear curve described by the coordinate points of the cntl_array and freq_array pairs.
From the curve, a frequency value is determined, and the oscillator will output a triangle wave at that frequency. From the above, it is easy to see that array sizes of 2 for both the cntl_array and the freq_array will yield a linear variation of the frequency with respect to the control input. Any sizes greater than 2 will yield a piecewise linear transfer characteristic. For more detail, refer to the description of the piecewise linear controlled source, which uses a similar method to derive an output value given a control input.

```
Example SPICE Usage:
ain 1 2 ramp1
.model ramp1 triangle(cntl_array = [-1 0 5 6]
+                     freq_array=[10 10 1000 1000] out_low = -5.0
+                     out_high = 5.0 duty_cycle = 0.9)
```

12.2.22 Controlled Square Wave Oscillator

```
NAME_TABLE:
C_Function_Name:    cm_square
Spice_Model_Name:   square
Description:        "controlled square wave oscillator"
PORT_TABLE:
Port Name:          cntl_in                 out
Description:        "control input"         "output"
Direction:          in                      out
Default_Type:       v                       v
Allowed_Types:      [v,vd,i,id]             [v,vd,i,id]
Vector:             no                      no
Vector_Bounds:      -                       -
Null_Allowed:       no                      no
```

```
PARAMETER_TABLE:
Parameter_Name:     cntl_array              freq_array
Description:        "control array"         "frequency array"
Data_Type:          real                    real
Default_Value:      0.0                     1.0e3
Limits:             -                       [0 -]
Vector:             yes                     yes
Vector_Bounds:      [2 -]                   cntl_array
Null_Allowed:       no                      no
PARAMETER_TABLE:
Parameter_Name:     out_low                 out_high
Description:        "output peak low value" "output peak high value"
Data_Type:          real                    real
Default_Value:      -1.0                    1.0
Limits:             -                       -
Vector:             no                      no
Vector_Bounds:      -                       -
Null_Allowed:       yes                     yes
PARAMETER.TABLE:
Parameter_Name:     duty_cycle              rise_time
Description:        "duty cycle"            "output rise time"
Data_Type:          real                    real
Default_Value:      0.5                     1.0e-9
Limits:             [1e-6 0.999999]         -
Vector: no
Vector_Bounds:      -                       -
Null_Allowed:       yes                     yes
PARAMETER_TABLE:
Parameter_Name:     fall_time
Description:        "output fall time"
Data_Type:          real
Default_Value:      1.0e-9
Limits:             -
Vector:             no
Vector_Bounds:      -
Null_Allowed:       yes
```

Description: This function is a controlled square wave oscillator with parametrizable values of low and high peak output, duty cycle, rise time, and fall time. It takes an input voltage or current value. This value is used as the independent variable in the piecewise linear curve described by the coordinate points of the cntl_array and freq_array pairs. From the curve, a frequency value is determined, and the oscillator will output a square wave at that frequency.

From the above, it is easy to see that array sizes of 2 for both the cntl_array and the freq_array will yield a linear variation of the frequency with respect to the control input. Any sizes greater than 2 will yield a piecewise linear transfer characteristic. For more detail, refer to the description of the piecewise linear controlled source, which uses a similar method to derive an output value given a control input.

```
Example SPICE Usage:
ain 1 2 pulse1
.model pulse1 square(cntl_array = [-1 0 5 6]
+                    freq_array=[10 10 1000 1000] out_low = 0.0
+                    out_high = 4.5 duty_cycle = 0.2
+                    rise_time = 1e-6 fall_time = 2e-6)
```

12.2.23 Controlled One-Shot

```
NAME_TABLE:
C_Function_Name:    cm_oneshot
Spice_Model_Name:   oneshot
Description:        "controlled one-shot"
PORT_TABLE:
Port Name:          clk                     cntl_in
Description:        "clock input"           "control input"
Direction:          in                      in
Default_Type:       v                       v
Allowed_Types:      [v,vd,i,id]             [v,vd,i,id]
Vector:             no                      no
Vector_Bounds:      -                       -
Null_Allowed:       no                      yes
PORT_TABLE:
Port Name:          clear                   out
Description:        "clear signal"          "output"
Direction:          in                      out
Default_Type:       v                       v
Allowed_Types:      [v,vd,i,id]             [v,vd,i,id]
Vector:             no                      no
Vector_Bounds:      -                       -
Null_Allowed:       yes                     no
PARAMETER_TABLE:
Parameter_Name:     clk_trig                retrig
Description:        "clock trigger value"   "retrigger switch"
Data_Type:          real                    boolean
Default_Value:      0.5                     FALSE
Limits:             -                       -
Vector:             no                      no
Vector_Bounds:      -                       -
Null_Allowed:       no                      yes
PARAMETER_TABLE:
Parameter_Name:     pos_edge_trig
Description:        "positive/negative edge trigger switch"
Data_Type:          boolean
Default_Value:      TRUE
Limits:             -
Vector:             no
Vector_Bounds:      -
```

```
Null_Allowed:       no
PARAMETER_TABLE:
Parameter_Name:     cntl_array              pw_array
Description:        "control array"         "pulse width array"
Data_Type:          real                    real
Default_Value:      0.0                     1.0e-6
Limits:             -                       [0.00 -]
Vector:             yes                     yes
Vector_Bounds:      -                       cntl_array
Null_Allowed:       yes                     yes
PARAMETER_TABLE:
Parameter_Name:     out_low                 out_high
Description:        "output low value"      "output high value"
Data_Type:          real                    real
Default_Value:      0.0                     1.0
Limits:             -                       -
Vector:             no                      no
Vector_Bounds:      -                       -
Null_Allowed:       yes                     yes
PARAMETER_TABLE:
Parameter_Name:     fall_time               rise_time
Description:        "output fall time"      "output rise time"
Data_Type:          real                    real
Default_Value:      1.0e-9                  1.0e-9
Limits:             -                       -
Vector:             no                      no
Vector_Bounds:      -                       -
Null_Allowed:       yes                        yes
PARAMETER_TABLE:
Parameter_Name:     rise_delay
Description:        "output delay from trigger"
Data_Type:          real
Default_Value:      1.0e-9
Limits:             -
Vector:             no
Vector_Bounds:      -
Null_Allowed:       yes
PARAMETER_TABLE:
Parameter_Name:     fall_delay
Description:        "output delay from pw"
Data_Type:          real
Default_Value:      1.0e-9
Limits:             -
Vector:             no
Vector_Bounds:      -
Null_Allowed:       yes
```

Description: This function is a controlled oneshot with parametrizable values of low and high peak output, input trigger value level, delay, and output rise and fall times. It takes an

input voltage or current value. This value is used as the independent variable in the piecewise linear curve described by the coordinate points of the cntl_array and pw_array pairs. From the curve, a pulse width value is determined. The one-shot will output a pulse of that width, triggered by the clock signal (rising or falling edge), delayed by the delay value, and with specified rise and fall times. A positive slope on the clear input will immediately terminate the pulse, which resets with its fall time.
From the above, it is easy to see that array sizes of 2 for both the cntl_array and the pw_array will yield a linear variation of the pulse width with respect to the control input. Any sizes greater than 2 will yield a piecewise linear transfer characteristic. For more detail, refer to the description of the piecewise linear controlled source, which uses a similar method to derive an output value given a control input.

```
Example SPICE Usage:
ain 1 2 3 4 pulse2
.model pulse2 oneshot(cntl_array = [-1 0 10 11]
+                     pw_array=[1e-6 1e-6 1e-4 1e-4]
+                     clk_trig = 0.9 pos_edge_trig = FALSE
+                     out_low = 0.0 out_high = 4.5
+                     rise_delay = 20.0-9 fall_delay = 35.0e-9)
```

12.2.24 Capacitance Meter

```
NAME_TABLE:
C_Function_Name:    cm_cmeter
Spice_Model_Name:   cmeter
Description:        "capacitance meter"
PORT_TABLE:
Port Name:          in                      out
Description:        "input"                 "output"
Direction:          in                      out
Default_Type:       v                       v
Allowed_Types:      [v,vd,i,id]             [v,vd,i,id]
Vector:             no                      no
Vector_Bounds:      -                       -
Null_Allowed:       no                      no
PARAMETER_TABLE:
Parameter_Name:     gain
Description:        "gain"
Data_Type:          real
Default_Value:      1.0
Limits:             -
Vector:             no
Vector_Bounds:      -
Null_Allowed:       yes
```

Description: The capacitance meter is a sensing device which is attached to a circuit node and produces as an output a scaled value equal to the total capacitance seen on its input multiplied by the gain parameter. This model is primarily intended as a building block for

other models which must sense a capacitance value and alter their behavior based upon it.

```
Example SPICE Usage:
atest1 1 2 ctest
.model ctest cmeter(gain=1.0e12)
```

12.2.25 Inductance Meter

```
NAME_TABLE:
C_Function_Name:     cm_lmeter
Spice_Model_Name:    lmeter
Description:         "inductance meter"
PORT_TABLE:
Port Name:           in                      out
Description:         "input"                 "output"
Direction:           in                      out
Default_Type:        v                       v
Allowed_Types:       [v,vd,i,id]             [v,vd,i,id]
Vector:              no                      no
Vector_Bounds:       -                       -
Null_Allowed:        no                      no
PARAMETER_TABLE:
Parameter_Name:     gain
Description:        "gain"
Data_Type:          real
Default_Value:      1.0
Limits:             -
Vector:             no
Vector_Bounds:      -
Null_Allowed:       yes
```

Description: The inductance meter is a sensing device which is attached to a circuit node and produces as an output a scaled value equal to the total inductance seen on its input multiplied by the gain parameter. This model is primarily intended as a building block for other models which must sense an inductance value and alter their behavior based upon it.

```
Example SPICE Usage:
atest2 1 2 ltest
.model ltest lmeter(gain=1.0e6)
```

12.3 Hybrid Models

The following hybrid models are supplied with XSPICE. The descriptions included below consist of the model Interface Specification File and a description of the model's operation. This

is followed by an example of a simulator-deck placement of the model, including the .MODEL card and the specification of all available parameters.

A note should be made with respect to the use of hybrid models for other than simple digital-to-analog and analog-to-digital translations. The hybrid models represented in this section address that specific need, but in the development of user-defined nodes you may find a need to translate not only between digital and analog nodes, but also between real and digital, real and int, etc. In most cases such translations will not need to be as involved or as detailed as shown in the following.

12.3.1 Digital-to-Analog Node Bridge

```
NAME_TABLE:
C_Function_Name:    cm_dac_bridge
Spice_Model_Name:   dac_bridge
Description:        "digital-to-analog node bridge"
PORT_TABLE:
Port Name:          in                      out
Description:        "input"                 "output"
Direction:          in                      out
Default_Type:       d                       v
Allowed_Types:      [d]                     [v,vd,i,id,d]
Vector:             yes                     yes
Vector_Bounds:      -                       -
Null_Allowed:       no                      no
PARAMETER_TABLE:
Parameter_Name:     out_low
Description:        "0-valued analog output"
Data_Type:          real
Default_Value:      0.0
Limits:             -
Vector:             no
Vector_Bounds:      -
Null_Allowed:       yes
PARAMETER_TABLE:
Parameter_Name:     out.high
Description:        "1-valued analog output"
Data_Type:          real
Default_Value:      1.0
Limits:             -
Vector:             no
Vector_Bounds:      -
Null_Allowed:       yes
PARAMETER_TABLE:
Parameter_Name:     out_undef                 input_load
Description:        "U-valued analog output"  "input load (F)"
Data_Type:          real                      real
Default_Value:      0.5                       1.0e-12
Limits:             -                         -
```

```
Vector:             no                      no
Vector_Bounds:      -                       -
Null_Allowed:       yes                     yes
PARAMETER_TABLE:
Parameter_Name:     t_rise                  t_fall
Description:        "rise time 0->1"        "fall time 1->0"
Data_Type:          real                    real
Default_Value:      1.0e-9                  1.0e-9
Limits:             -                       -
Vector:             no                      no
Vector_Bounds:      -                       -
Null_Allowed:       yes                     yes
```

Description: The dac_bridge is the first of two node bridge devices designed to allow for the ready transfer of digital information to analog values and back again. The second device is the adc_bridge (which takes an analog value and maps it to a digital one).The dac_bridge takes as input a digital value from a digital node. This value by definition may take on only one of the values "0", "1" or "U". The dac_bridge then outputs the value "out_low", "out_high" or "out_undef", or ramps linearly toward one of these "final" values from its current analog output level. The speed at which this ramping occurs depends on the values of "t_rise" and "t_fall". These parameters are interpreted by the model such that the rise or fall slope generated is always constant. **Note that the dac_bridge includes test code in its cfunc.mod file for determining the presence of the out_undef parameter. If this parameter is not specified by you, and if out_high and out_low values are specified, then out_undef is assigned the value of the arithmetic mean of out_high and out_low.** This simplifies coding of output buffers, where typically a logic family will include an out_low and out_high voltage, but not an out_undef value. This model also posts an input load value (in farads) based on the parameter input load.

```
Example SPICE Usage:
abridge1 [7] [2] dac1
.model dac1 dac_bridge(out_low = 0.7 out_high = 3.5 out_undef = 2.2
+                      input_load = 5.0e-12 t_rise = 50e-9
+                      t_fall = 20e-9)
```

12.3.2 Analog-to-Digital Node Bridge

```
NAME_TABLE:
C_Function_Name:    cm_adc_bridge
Spice_Model_Name:   adc_bridge
Description:        "analog-to-digital node bridge"
PORT_TABLE:
Port Name:          in                      out
Description:        "input"                 "output"
Direction:          in                      out
Default_Type:       v                       d
Allowed_Types:      [v,vd,i,id,d]           [d]
Vector:             yes                     yes
```

```
Vector_Bounds:      -                       -
Null_Allowed:       no                      no
PARAMETER_TABLE:
Parameter_Name:     in_low
Description:        "maximum 0-valued analog input"
Data_Type:          real
Default_Value:      1.0
Limits:             -
Vector:             no
Vector_Bounds:      -
Null_Allowed:       yes
PARAMETER_TABLE:
Parameter_Name:     in_high
Description:        "minimum 1-valued analog input"
Data_Type:          real
Default_Value:      2.0
Limits:             -
Vector:             no
Vector_Bounds:      -
Null_Allowed:       yes
PARAMETER_TABLE:
Parameter_Name:     rise_delay              fall_delay
Description:        "rise delay"            "fall delay"
Data_Type:          real                    real
Default_Value:      1.0e-9                  1.0e-9
Limits:             [1.0e-12 -]             [1.0e-12 -]
Vector:             no                      no
Vector_Bounds:      -                       -
Null_Allowed:       yes                     yes
```

Description: The adc_bridge is one of two node bridge devices designed to allow for the ready transfer of analog information to digital values and back again. The second device is the dac_bridge (which takes a digital value and maps it to an analog one). The adc_bridge takes as input an analog value from an analog node. This value by definition may be in the form of a voltage, or a current. If the input value is less than or equal to in_low, then a digital output value of "0" is generated. If the input is greater than or equal to in_high, a digital output value of "1" is generated. If neither of these is true, then a digital "UNKNOWN" value is output. Note that unlike the case of the dac_bridge, no ramping time or delay is associated with the adc_bridge. Rather, the continuous ramping of the input value provides for any associated delays in the digitized signal.

```
Example SPICE Usage:
abridge2 [1] [8] adc_buff
.model adc_buff adc_bridge(in_low = 0.3 in_high = 3.5)
```

12.3.3 Controlled Digital Oscillator

```
NAME_TABLE:
```

```
C_Function_Name:    cm_d_osc
Spice_Model_Name:   d_osc
Description:        "controlled digital oscillator"
PORT_TABLE:
Port Name:          cntl_in                 out
Description:        "control input"         "output"
Direction:          in                      out
Default_Type:       v                       d
Allowed_Types:      [v,vd,i,id]             [d]
Vector:             no                      no
Vector_Bounds:      -                       -
Null_Allowed:       no                      no
PARAMETER_TABLE:
Parameter_Name:     cntl_array              freq_array
Description:        "control array"         "frequency array"
Data_Type:          real                    real
Default_Value:      0.0                     1.0e6
Limits:             -                       [0 -]
Vector:             yes                     yes
Vector_Bounds:      [2 -]                   cntl_array
Null_Allowed:       no                      no
PARAMETER_TABLE:
Parameter_Name:     duty_cycle              init_phase
Description:        "duty cycle"            "initial phase of output"
Data_Type:          real                    real
Default_Value:      0.5                     0
Limits:             [1e-6 0.999999]         [-180.0 +360.0]
Vector:             no                      no
Vector_Bounds:      -                       -
Null_Allowed:       yes                     yes
PARAMETER_TABLE:
Parameter_Name:     rise_delay              fall_delay
Description:        "rise delay"            "fall delay"
Data_Type:          real                    real
Default_Value:      1e-9                    1e-9
Limits:             [0 -]                   [0 -]
Vector:             no                      no
Vector_Bounds:      -                       -
Null_Allowed:       yes                     yes
```

Description: The digital oscillator is a hybrid model which accepts as input a voltage or current. This input is compared to the voltage-to-frequency transfer characteristic specified by the cntl_array/freq_array coordinate pairs, and a frequency is obtained which represents a linear interpolation or extrapolation based on those pairs. A digital time-varying signal is then produced with this fundamental frequency.

The output waveform, which is the equivalent of a digital clock signal, has rise and fall delays which can be specified independently. In addition, the duty cycle and the phase of the waveform are also variable and can be set by you.

```
Example SPICE Usage:
a5 1 8 var_clock
.model var_clock d_osc(cntl_array = [-2 -1 1 2]
+                      freq_array = [1e3 1e3 10e3 10e3]
+                      duty_cycle = 0.4 init_phase = 180.0
+                      rise_delay = 10e-9 fall_delay=8e-9)
```

12.3.4 Node bridge from digital to real with enable

```
NAME_TABLE:
Spice_Model_Name: d_to_real
C_Function_Name:  ucm_d_to_real
Description: "Node bridge from digital to real with enable"
PORT_TABLE:
Port_Name:      in         enable     out
Description:    "input"    "enable"   "output"
Direction:      in         in         out
Default_Type:   d          d          real
Allowed_Types: [d]        [d]        [real]
Vector:         no         no         no
Vector_Bounds:  -          -           -
Null_Allowed:   no         yes        no
PARAMETER_TABLE:
Parameter_Name: zero            one            delay
Description:    "value for 0"   "value for 1"  "delay"
Data_Type:      real            real           real
Default_Value:  0.0             1.0            1e-9
Limits:         -               -              [1e-15 -]
Vector:         no              no             no
Vector_Bounds:  -               -              -
Null_Allowed:   yes             yes            yes
```

12.3.5 A Z**-1 block working on real data

```
NAME_TABLE:
Spice_Model_Name: real_delay
C_Function_Name: ucm_real_delay
Description: "A Z ** -1 block working on real data"
PORT_TABLE:
Port_Name:         in         clk         out
Description:       "input"    "clock"     "output"
Direction:         in         in          out
Default_Type:      real       d           real
Allowed_Types:     [real]     [d]         [real]
Vector:            no         no          no
Vector_Bounds:      -          -           -
Null_Allowed:      no         no          no
PARAMETER_TABLE:
```

```
Parameter_Name:    delay
Description:       "delay from clk to out"
Data_Type:         real
Default_Value:     1e-9
Limits:            [1e-15 -]
Vector:            no
Vector_Bounds:      -
Null_Allowed:      yes
```

12.3.6 A gain block for event-driven real data

```
NAME_TABLE:
Spice_Model_Name:      real_gain
C_Function_Name:       ucm_real_gain
Description:           "A gain block for event-driven real data"
PORT_TABLE:
Port_Name:             in                out
Description:           "input"           "output"
Direction:             in                out
Default_Type:          real              real
Allowed_Types:         [real]            [real]
Vector:                no                no
Vector_Bounds:         -                 -
Null_Allowed:          no                no
PARAMETER_TABLE:
Parameter_Name:        in_offset         gain              out_offset
Description:           "input offset"    "gain"            "output offset"
Data_Type:             real              real              real
Default_Value:         0.0               1.0               0.0
Limits:                -                 -                 -
Vector:                no                no                no
Vector_Bounds:         -                 -                 -
Null_Allowed:          yes               yes               yes
PARAMETER_TABLE:
Parameter_Name:        delay             ic
Description:           "delay"           "initial condition"
Data_Type:             real              real
Default_Value:         1.0e-9            0.0
Limits:                -                 -
Vector:                no                no
Vector_Bounds:         -                 -
Null_Allowed:          yes               yes
```

12.3.7 Node bridge from real to analog voltage

```
NAME_TABLE:
Spice_Model_Name:      real_to_v
C_Function_Name:       ucm_real_to_v
```

```
Description:          "Node bridge from real to analog voltage"
PORT_TABLE:
Port_Name:            in                out
Description:          "input"           "output"
Direction:            in                out
Default_Type:         real              v
Allowed_Types:        [real]            [v, vd, i, id]
Vector:               no                no
Vector_Bounds:        -                 -
Null_Allowed:         no                no
PARAMETER_TABLE:
Parameter_Name:       gain              transition_time
Description:          "gain"            "output transition time"
Data_Type:            real              real
Default_Value:        1.0               1e-9
Limits:               -                 [1e-15 -]
Vector:               no                no
Vector_Bounds:        -                 -
Null_Allowed:         yes               yes
```

12.4 Digital Models

The following digital models are supplied with XSPICE. The descriptions included below consist of an example model Interface Specification File and a description of the model's operation. This is followed by an example of a simulator-deck placement of the model, including the .MODEL card and the specification of all available parameters. Note that these models have not been finalized at this time.

Some information common to all digital models and/or digital nodes is included here. The following are general rules which should make working with digital nodes and models more straightforward:

1. All digital nodes are initialized to ZERO at the start of a simulation (i.e., when INIT=TRUE). This means that a model need not post an explicit value to an output node upon initialization if its output would normally be a ZERO (although posting such would certainly cause no harm).

12.4.1 Buffer

```
NAME_TABLE:
C_Function_Name:    cm_d_buffer
Spice_Model_Name:   d_buffer
Description:        "digital one-bit-wide buffer"
PORT_TABLE:
Port Name:          in                      out
Description:        "input"                 "output"
Direction:          in                      out
```

```
Default_Type:       d                       d
Allowed_Types:      [d]                     [d]
Vector:             no                      no
Vector_Bounds:      -                       -
Null_Allowed:       no                      no
PARAMETER_TABLE:
Parameter_Name:     rise_delay              fall_delay
Description:        "rise delay"            "fall delay"
Data_Type:          real                    real
Default_Value:      1.0e-9                  1.0e-9
Limits:             [1.0e-12 -]             [1.0e-12 -]
Vector:             no                      no
Vector_Bounds:      -                       -
Null_Allowed:       yes                     yes
PARAMETER_TABLE:
Parameter_Name:     input_load
Description:        "input load value (F)"
Data_Type:          real
Default_Value:      1.0e-12
Limits:             -
Vector:             no
Vector_Bounds:      -
Null_Allowed:       yes
```

Description: The buffer is a single-input, single-output digital buffer which produces as output a time-delayed copy of its input. The delays associated with an output rise and those associated with an output fall may be different. The model also posts an input load value (in farads) based on the parameter input load. The output of this model does NOT, however, respond to the total loading it sees on its output; it will always drive the output strongly with the specified delays.

```
Example SPICE Usage:
a6 1 8 buff1
.model buff1 d_buffer(rise_delay = 0.5e-9 fall_delay = 0.3e-9
+                     input_load = 0.5e-12)
```

12.4.2 Inverter

```
NAME_TABLE:
C_Function_Name:    cm_d_inverter
Spice_Model_Name:   d_inverter
Description:        "digital one-bit-wide inverter"
PORT_TABLE:
Port Name:          in                      out
Description:        "input"                 "output"
Direction:          in                      out
Default_Type:       d                       d
Allowed_Types:      [d]                     [d]
```

```
Vector:             no                      no
Vector_Bounds:      -                       -
Null_Allowed:       no                      no
PARAMETER_TABLE:
Parameter_Name:     rise_delay              fall_delay
Description:        "rise delay"            "fall delay"
Data_Type:          real                    real
Default_Value:      1.0e-9                  1.0e-9
Limits:             [1.0e-12 -]             [1.0e-12 -]
Vector:             no                      no
Vector_Bounds:      -                       -
Null_Allowed:       yes                     yes
PARAMETER_TABLE:
Parameter_Name:     input_load
Description:        "input load value (F)"
Data_Type:          real
Default_Value:      1.0e-12
Limits:             -
Vector:             no
Vector_Bounds:      -
Null_Allowed:       yes
```

Description: The inverter is a single-input, single-output digital inverter which produces as output an inverted, time- delayed copy of its input. The delays associated with an output rise and those associated with an output fall may be specified independently. The model also posts an input load value (in farads) based on the parameter input load. The output of this model does NOT, however, respond to the total loading it sees on its output; it will always drive the output strongly with the specified delays.

```
Example SPICE Usage:
a6 1 8 inv1
.model inv1 d_inverter(rise_delay = 0.5e-9 fall_delay = 0.3e-9
+                      input_load = 0.5e-12)
```

12.4.3 And

```
NAME_TABLE:
C_Function_Name:    cm_d_and
Spice_Model_Name:   d_and
Description:        "digital ‘and’ gate"
PORT_TABLE:
Port Name:          in                      out
Description:        "input"                 "output"
Direction:          in                      out
Default_Type:       d                       d
Allowed_Types:      [d]                     [d]
Vector:             yes                     no
Vector_Bounds:      [2 -]                   -
```

```
Null_Allowed:       no                      no
PARAMETER_TABLE:
Parameter_Name:     rise_delay              fall_delay
Description:        "rise delay"            "fall delay"
Data_Type:          real                    real
Default_Value:      1.0e-9                  1.0e-9
Limits:             [1.0e-12 -]             [1.0e-12 -]
Vector:             no                      no
Vector_Bounds:      -                       -
Null_Allowed:       yes                     yes
PARAMETER_TABLE:
Parameter_Name:     input_load
Description:        "input load value (F)"
Data_Type:          real
Default_Value:      1.0e-12
Limits:             -
Vector:             no
Vector_Bounds:      -
Null_Allowed:       yes
```

Description: The digital 'and' gate is an n-input, single-output 'and' gate which produces an active "1" value if, and only if, all of its inputs are also "1" values. If ANY of the inputs is a "0", the output will also be a "0"; if neither of these conditions holds, the output will be unknown. The delays associated with an output rise and those associated with an output fall may be specified independently. The model also posts an input load value (in farads) based on the parameter input load. The output of this model does NOT, however, respond to the total loading it sees on its output; it will always drive the output strongly with the specified delays.

```
Example SPICE Usage:
a6 [1 2] 8 and1
.model and1 d_and(rise_delay = 0.5e-9 fall_delay = 0.3e-9
+                 input_load = 0.5e-12)
```

12.4.4 Nand

```
NAME_TABLE:
C_Function_Name:    cm_d_nand
Spice_Model_Name:   d_nand
Description:        "digital 'nand' gate"
PORT_TABLE:
Port Name:          in                      out
Description:        "input"                 "output"
Direction:          in                      out
Default_Type:       d                       d
Allowed_Types:      [d]                     [d]
Vector:             yes                     no
Vector_Bounds:      [2 -]                   -
```

```
Null_Allowed:       no                      no
PARAMETER_TABLE:
Parameter_Name:     rise_delay              fall_delay
Description:        "rise delay"            "fall delay"
Data_Type:          real                    real
Default_Value:      1.0e-9                  1.0e-9
Limits:             [1.0e-12 -]             [1.0e-12 -]
Vector:             no                      no
Vector_Bounds:      -                       -
Null_Allowed:       yes                     yes
PARAMETER_TABLE:
Parameter_Name:     input_load
Description:        "input load value (F)"
Data_Type:          real
Default_Value:      1.0e-12
Limits:             -
Vector:             no
Vector_Bounds:      -
Null_Allowed:       yes
```

Description: The digital ‘nand’ gate is an n-input, single-output ‘nand’ gate which produces an active “0” value if and only if all of its inputs are “1” values. If ANY of the inputs is a “0”, the output will be a “1”; if neither of these conditions holds, the output will be unknown. The delays associated with an output rise and those associated with an output fall may be specified independently. The model also posts an input load value (in farads) based on the parameter input load. The output of this model does NOT, however, respond to the total loading it sees on its output; it will always drive the output strongly with the specified delays.

```
Example SPICE Usage:
a6 [1 2 3] 8 nand1
.model nand1 d_nand(rise_delay = 0.5e-9 fall_delay = 0.3e-9
+                   input_load = 0.5e-12)
```

12.4.5 Or

```
NAME_TABLE:
C_Function_Name:    cm_d_or
Spice_Model_Name:   d_or
Description:        "digital ‘or’ gate"
PORT_TABLE:
Port Name:          in                      out
Description:        "input"                 "output"
Direction:          in                      out
Default_Type:       d                       d
Allowed_Types:      [d]                     [d]
Vector:             yes                     no
Vector_Bounds:      [2 -]                   -
```

```
Null_Allowed:       no                      no
PARAMETER_TABLE:
Parameter_Name:     rise_delay              fall_delay
Description:        "rise delay"            "fall delay"
Data_Type:          real                    real
Default_Value:      1.0e-9                  1.0e-9
Limits:             [1.0e-12 -]             [1.0e-12 -]
Vector:             no                      no
Vector_Bounds:      -                       -
Null_Allowed:       yes                     yes
PARAMETER_TABLE:
Parameter_Name:     input_load
Description:        "input load value (F)"
Data_Type:          real
Default_Value:      1.0e-12
Limits:             -
Vector:             no
Vector_Bounds:      -
Null_Allowed:       yes
```

Description: The digital ‘or’ gate is an n-input, single-output ‘or’ gate which produces an active “1” value if at least one of its inputs is a “1” value. The gate produces a “0” value if all inputs are “0”; if neither of these two conditions holds, the output is unknown. The delays associated with an output rise and those associated with an output fall may be specified independently. The model also posts an input load value (in farads) based on the parameter input load. The output of this model does NOT, however, respond to the total loading it sees on its output; it will always drive the output strongly with the specified delays.

```
Example SPICE Usage:
a6 [1 2 3] 8 or1
.model or1 d_or(rise_delay = 0.5e-9 fall_delay = 0.3e-9
+               input_load = 0.5e-12)
```

12.4.6 Nor

```
NAME_TABLE:
C_Function_Name:    cm_d_nor
Spice_Model_Name:   d_nor
Description:        "digital ‘nor’ gate"
PORT_TABLE:
Port Name:          in                      out
Description:        "input"                 "output"
Direction:          in                      out
Default_Type:       d                       d
Allowed_Types:      [d]                     [d]
Vector:             yes                     no
Vector_Bounds:      [2 -]                   -
```

```
Null_Allowed:       no                      no
PARAMETER_TABLE:
Parameter_Name:     rise_delay              fall_delay
Description:        "rise delay"            "fall delay"
Data_Type:          real                    real
Default_Value:      1.0e-9                  1.0e-9
Limits:             [1.0e-12 -]             [1.0e-12 -]
Vector:             no                      no
Vector_Bounds:      -                       -
Null_Allowed:       yes                     yes
PARAMETER_TABLE:
Parameter_Name:     input_load
Description:        "input load value (F)"
Data_Type:          real
Default_Value:      1.0e-12
Limits:             -
Vector:             no
Vector_Bounds:      -
Null_Allowed:       yes
```

Description: The digital 'nor' gate is an n-input, single-output 'nor' gate which produces an active "0" value if at least one of its inputs is a "1" value. The gate produces a "0" value if all inputs are "0"; if neither of these two conditions holds, the output is unknown. The delays associated with an output rise and those associated with an output fall may be specified independently. The model also posts an input load value (in farads) based on the parameter input load. The output of this model does NOT, however, respond to the total loading it sees on its output; it will always drive the output strongly with the specified delays.

```
Example SPICE Usage:
anor12 [1 2 3 4] 8 nor12
.model nor12 d_or(rise_delay = 0.5e-9 fall_delay = 0.3e-9
+                 input_load = 0.5e-12)
```

12.4.7 Xor

```
NAME_TABLE:
C_Function_Name:    cm_d_xor
Spice_Model_Name:   d_xor
Description:        "digital exclusive-or gate"
PORT_TABLE:
Port Name:          in                      out
Description:        "input"                 "output"
Direction:          in                      out
Default_Type:       d                       d
Allowed_Types:      [d]                     [d]
Vector:             yes                     no
Vector_Bounds:      [2 -]                   -
```

```
Null_Allowed:       no                      no
PARAMETER_TABLE:
Parameter_Name:     rise_delay              fall_delay
Description:        "rise delay"            "fall delay"
Data_Type:          real                    real
Default_Value:      1.0e-9                  1.0e-9
Limits:             [1.0e-12 -]             [1.0e-12 -]
Vector:             no                      no
Vector_Bounds:      -                       -
Null_Allowed:       yes                     yes
PARAMETER_TABLE:
Parameter_Name:     input_load
Description:        "input load value (F)"
Data_Type:          real
Default_Value:      1.0e-12
Limits:             -
Vector:             no
Vector_Bounds:      -
Null_Allowed:       yes
```

Description: The digital 'xor' gate is an n-input, single-output 'xor' gate which produces an active "1" value if an odd number of its inputs are also "1" values. The delays associated with an output rise and those associated with an output fall may be specified independently.

The model also posts an input load value (in farads) based on the parameter input load. The output of this model does NOT, however, respond to the total loading it sees on its output; it will always drive the output strongly with the specified delays. Note also that to maintain the technology-independence of the model, any UNKNOWN input, or any floating input causes the output to also go UNKNOWN.

```
Example SPICE Usage:
a9 [1 2] 8 xor3
.model xor3 d_xor(rise_delay = 0.5e-9 fall_delay = 0.3e-9
+                 input_load = 0.5e-12)
```

12.4.8 Xnor

```
NAME_TABLE:
C_Function_Name:    cm_d_xnor
Spice_Model_Name:   d_xnor
Description:        "digital exclusive-nor gate"
PORT_TABLE:
Port Name:          in                      out
Description:        "input"                 "output"
Direction:          in                      out
Default_Type:       d                       d
Allowed_Types:      [d]                     [d]
Vector:             yes                     no
```

```
Vector_Bounds:      [2 -]                   -
Null_Allowed:       no                      no
PARAMETER_TABLE:
Parameter_Name:     rise_delay              fall_delay
Description:        "rise delay"            "fall delay"
Data_Type:          real                    real
Default_Value:      1.0e-9                  1.0e-9
Limits:             [1.0e-12 -]             [1.0e-12 -]
Vector:             no                      no
Vector_Bounds:      -                       -
Null_Allowed:       yes                     yes
PARAMETER_TABLE:
Parameter_Name:     input_load
Description:        "input load value (F)"
Data_Type:          real
Default_Value:      1.0e-12
Limits:             -
Vector:             no
Vector_Bounds:      -
Null_Allowed:       yes
```

Description: The digital 'xnor' gate is an n-input, single-output 'xnor' gate which produces an active "0" value if an odd number of its inputs are also "1" values. It produces a "1" output when an even number of "1" values occurs on its inputs. The delays associated with an output rise and those associated with an output fall may be specified independently. The model also posts an input load value (in farads) based on the parameter input load. The output of this model does NOT, however, respond to the total loading it sees on its output; it will always drive the output strongly with the specified delays. Note also that to maintain the technology-independence of the model, any UNKNOWN input, or any floating input causes the output to also go UNKNOWN.

```
Example SPICE Usage:
a9 [1 2] 8 xnor3
.model xnor3 d_xnor(rise_delay = 0.5e-9 fall_delay = 0.3e-9
+                   input_load = 0.5e-12)
```

12.4.9 Tristate

```
NAME_TABLE:
C_Function_Name:    cm_d_tristate
Spice_Model_Name:   d_tristate
Description:        "digital tristate buffer"
PORT_TABLE:
Port Name:          in        enable        out
Description:        "input"   "enable"      "output"
Direction:          in        in            out
Default_Type:       d         d             d
Allowed_Types:      [d]       [d]           [d]
```

```
Vector:             no        no            no
Vector_Bounds:      -         -             -
Null_Allowed:       no        no            no
PARAMETER_TABLE:
Parameter_Name:     delay
Description:        "delay"
Data_Type:          real
Default_Value:      1.0e-9
Limits:             [1.0e-12 -]
Vector:             no
Vector_Bounds:      -
Null_Allowed:       yes
PARAMETER_TABLE:
Parameter_Name:     input_load
Description:        "input load value (F)"
Data_Type:          real
Default_Value:      1.0e-12
Limits:             -
Vector:             no
Vector_Bounds:      -
Null_Allowed:       yes
PARAMETER_TABLE:
Parameter_Name:     enable_load
Description:        "enable load value (F)"
Data_Type:          real
Default_Value:      1.0e-12
Limits:             -
Vector:             no
Vector_Bounds:      -
Null_Allowed:       yes
```

Description: The digital tristate is a simple tristate gate which can be configured to allow for open-collector behavior, as well as standard tristate behavior. The state seen on the input line is reflected in the output. The state seen on the enable line determines the strength of the output. Thus, a ONE forces the output to its state with a STRONG strength. A ZERO forces the output to go to a HI_IMPEDANCE strength. The delays associated with an output state or strength change cannot be specified independently, nor may they be specified independently for rise or fall conditions; other gate models may be used to provide such delays if needed. The model posts input and enable load values (in farads) based on the parameters input load and enable.The output of this model does NOT, however, respond to the total loading it sees on its output; it will always drive the output with the specified delay. Note also that to maintain the technology-independence of the model, any UNKNOWN input, or any floating input causes the output to also go UNKNOWN. Likewise, any UNKNOWN input on the enable line causes the output to go to an UNDETERMINED strength value.

```
Example SPICE Usage:
a9 1 2 8 tri7
```

```
.model tri7 d_tristate(delay = 0.5e-9 input_load = 0.5e-12
+                      enable_load = 0.5e-12)
```

12.4.10 Pullup

```
NAME_TABLE:
C_Function_Name:    cm_d_pullup
Spice_Model_Name:   d_pullup
Description:        "digital pullup resistor"
PORT_TABLE:
Port Name:          out
Description:        "output"
Direction:          out
Default_Type:       d
Allowed_Types:      [d]
Vector:             no
Vector_Bounds:      -
Null_Allowed:       no
PARAMETER_TABLE:
Parameter_Name:     load
Description:        "load value (F)"
Data_Type:          real
Default_Value:      1.0e-12
Limits:             -
Vector:             no
Vector_Bounds:      -
Null_Allowed:       yes
```

Description: The digital pullup resistor is a device which emulates the behavior of an analog resistance value tied to a high voltage level. The pullup may be used in conjunction with tristate buffers to provide open-collector wired "or" constructs, or any other logical constructs which rely on a resistive pullup common to many tristated output devices. The model posts an input load value (in farads) based on the parameters "load".

```
Example SPICE Usage:
a2 9 pullup1
.model pullup1 d_pullup(load = 20.0e-12)
```

12.4.11 Pulldown

```
NAME_TABLE:
C_Function_Name:    cm_d_pulldown
Spice_Model_Name:   d_pulldown
Description:        "digital pulldown resistor"
PORT_TABLE:
Port Name:          out
Description:        "output"
```

```
Direction:          out
Default_Type:       d
Allowed_Types:      [d]
Vector:             no
Vector_Bounds:      -
Null_Allowed:       no
PARAMETER_TABLE:
Parameter_Name:     load
Description:        "load value (F)"
Data_Type:          real
Default_Value:      1.0e-12
Limits:             -
Vector:             no
Vector_Bounds:      -
Null_Allowed:       yes
```

Description: The digital pulldown resistor is a device which emulates the behavior of an analog resistance value tied to a low voltage level. The pulldown may be used in conjunction with tristate buffers to provide open-collector wired "or" constructs, or any other logical constructs which rely on a resistive pulldown common to many tristated output devices. The model posts an input load value (in farads) based on the parameters "load".

```
Example SPICE Usage:
a4 9 pulldown1
.model pulldown1 d_pulldown(load = 20.0e-12)
```

12.4.12 D Flip Flop

```
NAME_TABLE:
C_Function_Name:    cm_d_dff
Spice_Model_Name:   d_dff
Description:        "digital d-type flip flop"
PORT_TABLE:
Port Name:          data                    clk
Description:        "input data"            "clock"
Direction:          in                      in
Default_Type:       d                       d
Allowed_Types:      [d]                     [d]
Vector:             no                      no
Vector_Bounds:      -                       -
Null_Allowed:       no                      no
PORT_TABLE:
Port Name:         set                      reset
Description:       "asynch. set"            "asynch. reset"
Direction:         in                       in
Default_Type:      d                        d
Allowed_Types:     [d]                      [d]
Vector:            no                       no
```

```
Vector_Bounds:     -                        -
Null_Allowed:      yes                      yes
PORT_TABLE:
Port Name:         out                      Nout
Description:       "data output"            "inverted data output"
Direction:         out                      out
Default_Type:      d                        d
Allowed_Types:     [d]                      [d]
Vector:            no                       no
Vector_Bounds:     -                        -
Null_Allowed:      yes                      yes
PARAMETER_TABLE:
Parameter_Name:    clk_delay                set_delay
Description:       "delay from clk"         "delay from set"
Data_Type:         real                     real
Default_Value:     1.0e-9                   1.0e-9
Limits:            [1.0e-12 -]              [1.0e-12 -]
Vector:            no                       no
Vector_Bounds:     -                        -
Null_Allowed:      yes                      yes
PARAMETER_TABLE:
Parameter_Name:    reset_delay              ic
Description:       "delay from reset"       "output initial state"
Data_Type:         real                     int
Default_Value:     1.0                      0
Limits:            [1.0e-12 -]              [0 2]
Vector:            no                       no
Vector_Bounds:     -                        -
Null_Allowed:      yes                      yes
PARAMETER_TABLE:
Parameter_Name:    data_load                clk_load
Description:       "data load value (F)"    "clk load value (F)"
Data_Type:         real                     real
Default_Value:     1.0e-12                  1.0e-12
Limits:            -                        -
Vector:            no                       no
Vector_Bounds:     -                        -
Null_Allowed:      yes                      yes
PARAMETER_TABLE:
Parameter_Name:    set_load                 reset_load
Description:       "set load value (F)"     "reset load (F)"
Data_Type:         real                     real
Default_Value:     1.0e-12                  1.0e-12
Limits:            -                        -
Vector:            no                       no
Vector.Bounds:     -                        -
Null_Allowed:      yes                      yes
PARAMETER_TABLE:
```

```
Parameter_Name:    rise_delay              fall_delay
Description:       "rise delay"            "fall delay"
Data_Type:         real                    real
Default_Value:     1.0e-9                  1.0e-9
Limits:            [1.0e-12 -]             [1.0e-12 -]
Vector:            no                      no
Vector_Bounds:     -                       -
Null_Allowed:      yes                     yes
```

Description: The digital d-type flip flop is a one-bit, edge-triggered storage element which will store data whenever the clk input line transitions from low to high (ZERO to ONE). In addition, asynchronous set and reset signals exist, and each of the three methods of changing the stored output of the d_dff have separate load values and delays associated with them. Additionally, you may specify separate rise and fall delay values that are added to those specified for the input lines; these allow for more faithful reproduction of the output characteristics of different IC fabrication technologies.
Note that any UNKNOWN input on the set or reset lines immediately results in an UNKNOWN output.

```
Example SPICE Usage:
a7 1 2 3 4 5 6 flop1
.model flop1 d_dff(clk_delay = 13.0e-9 set_delay = 25.0e-9
+                  reset_delay = 27.0e-9 ic = 2 rise_delay = 10.0e-9
+                  fall_delay = 3e-9)
```

12.4.13 JK Flip Flop

```
NAME_TABLE:
C_Function_Name:    cm_d_jkff
Spice_Model_Name:   d_jkff
Description:        "digital jk-type flip flop"
PORT_TABLE:
Port Name:          j                       k
Description:        "j input"               "k input"
Direction:          in                      in
Default_Type:       d                       d
Allowed_Types:      [d]                     [d]
Vector:             no                      no
Vector_Bounds:      -                       -
Null_Allowed:       no                      no
PORT_TABLE:
Port Name:          clk
Description:        "clock"
Direction:          in
Default_Type:       d
Allowed_Types:      [d]
Vector:             no
Vector_Bounds:      -
```

```
Null_Allowed:       no
PORT_TABLE:
Port Name:          set                     reset
Description:        "asynchronous set"      "asynchronous reset"
Direction:          in                      in
Default_Type:       d                       d
Allowed_Types:      [d]                     [d]
Vector:             no                      no
Vector_Bounds:      -                       -
Null_Allowed:       yes                     yes
PORT_TABLE:
Port Name:          out                     Nout
Description:        "data output"           "inverted data output"
Direction:          out                     out
Default_Type:       d                       d
Allowed_Types:      [d]                     [d]
Vector:             no                      no
Vector_Bounds       -                       -
Null_Allowed:       yes                     yes
PARAMETER_TABLE:
Parameter_Name:     clk_delay               set_delay
Description:        "delay from clk"        "delay from set"
Data_Type:          real                    real
Default_Value:      1.0e-9                  1.0e-9
Limits:             [1.0e-12 -]             [1.0e-12 -]
Vector:             no                      no
Vector_Bounds:      -                       -
Null_Allowed:       yes                     yes
PARAMETER_TABLE:
Parameter_Name:     reset_delay             ic
Description:        "delay from reset"      "output initial state"
Data_Type:          real                    int
Default_Value:      1.0                     0
Limits:             [1.0e-12 -]             [0 2]
Vector:             no                      no
Vector_Bounds:      -                       -
Null_Allowed:       yes                     yes
PARAMETER_TABLE:
Parameter_Name:     jk_load                 clk_load
Description:        "j,k load values (F)"   "clk load value (F)"
Data_Type:          real                    real
Default_Value:      1.0e-12                 1.0e-12
Limits:             -                       -
Vector:             no                      no
Vector_Bounds:      -                       -
Null_Allowed:       yes                     yes
PARAMETER_TABLE:
Parameter_Name:     set_load                reset_load
```

```
Description:        "set load value (F)"   "reset load (F)"
Data_Type:          real                   real
Default_Value:      1.0e-12                1.0e-12
Limits:             -                      -
Vector:             no                     no
Vector_Bounds:      -                      -
Null_Allowed:       yes                    yes
PARAMETER_TABLE:
Parameter_Name:     rise_delay             fall_delay
Description:        "rise delay"           "fall delay"
Data_Type:          real                   real
Default_Value:      1.0e-9                 1.0e-9
Limits:             [1.0e-12 -]            [1.0e-12 -]
Vector:             no                     no
Vector_Bounds:      -                      -
Null_Allowed:       yes                    yes
```

Description: The digital jk-type flip flop is a one-bit, edge-triggered storage element which will store data whenever the clk input line transitions from low to high (ZERO to ONE). In addition, asynchronous set and reset signals exist, and each of the three methods of changing the stored output of the d_jkff have separate load values and delays associated with them. Additionally, you may specify separate rise and fall delay values that are added to those specified for the input lines; these allow for more faithful reproduction of the output characteristics of different IC fabrication technologies.
Note that any UNKNOWN inputs other than j or k cause the output to go UNKNOWN automatically.

```
Example SPICE Usage:
a8 1 2 3 4 5 6 7 flop2
.model flop2 d_jkff(clk_delay = 13.0e-9 set_delay = 25.0e-9
+                   reset_delay = 27.0e-9 ic = 2 rise_delay = 10.0e-9
+                   fall_delay = 3e-9)
```

12.4.14 Toggle Flip Flop

```
NAME_TABLE:
C_Function_Name:    cm_d_tff
Spice_Model_Name:   d_tff
Description:        "digital toggle flip flop"
PORT_TABLE:
Port Name:          t                      clk
Description:        "toggle input"         "clock"
Direction:          in                     in
Default_Type:       d                      d
Allowed_Types:      [d]                    [d]
Vector:             no                     no
Vector_Bounds:      -                      -
Null_Allowed:       no                     no
```

```
PORT_TABLE:
Port Name:          set                     reset
Description:        "set"                   "reset"
Direction:          in                      in
Default_Type:       d                       d
Allowed_Types:      [d]                     [d]
Vector:             no                      no
Vector_Bounds:      -                       -
Null_Allowed:       yes                     yes
PORT.TABLE:
Port Name:          out                     Nout
Description:        "data output"           "inverted data output"
Direction:          out                     out
Default_Type:       d                       d
Allowed_Types:      [d]                     [d]
Vector:             no                      no
Vector_Bounds:      -                       -
Null_Allowed:       yes                     yes
PARAMETER_TABLE:
Parameter_Name:     clk_delay               set_delay
Description:        "delay from clk"        "delay from set"
Data_Type:          real                    real
Default_Value:      1.0e-9                  1.0e-9
Limits:             [1.0e-12 -]             [1.0e-12 -]
Vector:             no                      no
Vector_Bounds       -                       -
Null_Allowed:       yes                     yes
PARAMETER_TABLE:
Parameter_Name:     reset_delay             ic
Description:        "delay from reset"      "output initial state"
Data_Type:          real                    int
Default_Value:      1.0                     0
Limits:             [1.0e-12 -]             [0 2]
Vector:             no                      no
Vector_Bounds:      -                       -
Null_Allowed:       yes                     yes
PARAMETER_TABLE:
Parameter_Name:     t_load                   clk_load
Description:        "toggle load value (F)" "clk load value (F)"
Data_Type:          real                     real
Default_Value:      1.0e-12                  1.0e-12
Limits:             -                        -
Vector:             no                       no
Vector_Bounds:      -                        -
Null_Allowed:       yes                      yes
PARAMETER_TABLE:
Parameter_Name:     set_load                 reset_load
Description:        "set load value (F)"     "reset load (F)"
```

```
Data_Type:          real                    real
Default.Value:      1.0e-12                 1.0e-12
Limits:             -                       -
Vector:             no                      no
Vector_Bounds:      -                       -
Null_Allowed:       yes                     yes
PARAMETER_TABLE:
Parameter_Name:     rise_delay              fall_delay
Description:        "rise delay"            "fall delay"
Data_Type:          real                    real
Default_Value:      1.0e-9                  1.0e-9
Limits:             [1.0e-12 -]             [1.0e-12 -]
Vector:             no                      no
Vector_Bounds:      -                       -
Null_Allowed:       yes                     yes
```

Description: The digital toggle-type flip flop is a one-bit, edge-triggered storage element which will toggle its current state whenever the clk input line transitions from low to high (ZERO to ONE). In addition, asynchronous set and reset signals exist, and each of the three methods of changing the stored output of the d_tff have separate load values and delays associated with them. Additionally, you may specify separate rise and fall delay values that are added to those specified for the input lines; these allow for more faithful reproduction of the output characteristics of different IC fabrication technologies.
Note that any UNKNOWN inputs other than t immediately cause the output to go UNKNOWN.

```
Example SPICE Usage:
a8 2 12 4 5 6 3 flop3
.model flop3 d_tff(clk_delay = 13.0e-9 set_delay = 25.0e-9
+                  reset_delay = 27.0e-9 ic = 2 rise_delay = 10.0e-9
+                  fall_delay = 3e-9 t_load = 0.2e-12)
```

12.4.15 Set-Reset Flip Flop

```
NAME_TABLE:
C_Function_Name:    cm_d_srff
Spice_Model_Name:   d_srff
Description:        "digital set-reset flip flop"
PORT_TABLE:
Port Name:          s                       r
Description:        "set input"             "reset input"
Direction:          in                      in
Default_Type:       d                       d
Allowed_Types:      [d]                     [d]
Vector:             no                      no
Vector_Bounds:      -                       -
Null_Allowed:       no                      no
PORT_TABLE:
```

```
Port Name:          clk
Description:        "clock"
Direction:          in
Default_Type:       d
Allowed_Types:      [d]
Vector:             no
Vector_Bounds:      -
Null_Allowed:       no
PORT_TABLE:
Port Name:          set                     reset
Description:        "asynchronous set"      "asynchronous reset"
Direction:          in                      in
Default_Type:       d                       d
Allowed_Types:      [d]                     [d]
Vector:             no                      no
Vector_Bounds:      -                       -
Null_Allowed:       yes                     yes
PORT_TABLE:
Port Name:          out                     Nout
Description:        "data output"           "inverted data output"
Direction:          out                     out
Default_Type:       d                       d
Allowed_Types:      [d]                     [d]
Vector:             no                      no
Vector_Bounds:      -                       -
Null_Allowed:       yes                     yes
PARAMETER_TABLE:
Parameter_Name:     clk_delay               set_delay
Description:        "delay from clk"        "delay from set"
Data_Type:          real                    real
Default_Value:      1.0e-9                  1.0e-9
Limits:             [1.0e-12 -]             [1.0e-12 -]
Vector:             no                      no
Vector_Bounds:      -                       -
Null_Allowed:       yes                     yes
PARAMETER_TABLE:
Parameter_Name:     reset_delay             ic
Description:        "delay from reset"      "output initial state"
Data_Type:          real                    int
Default_Value:      1.0e-9                  0
Limits:             [1.0e-12 -]             [0 2]
Vector:             no                      no
Vector_Bounds:      -                       -
Null_Allowed:       yes                     yes
PARAMETER_TABLE:
Parameter_Name:     sr_load                 clk_load
Description:        "set/reset loads (F)"   "clk load value (F)"
Data_Type:          real                    real
```

```
Default_Value:      1.0e-12                 1.0e-12
Limits:             -                       -
Vector:             no                      no
Vector_Bounds:      -                       -
Null_Allowed:       yes                     yes
PARAMETER_TABLE:
Parameter_Name:     set_load                reset_load
Description:        "set load value (F)"    "reset load (F)"
Data_Type:          real                    real
Default_Value:      1.0e-12                 1.0e-12
Limits:             -                       -
Vector:             no                      no
Vector_Bounds:      -                       -
Null_Allowed:       yes                     yes
PARAMETER_TABLE:
Parameter_Name:     rise_delay              fall_delay
Description:        "rise delay"            "fall delay"
Data_Type:          real                    real
Default_Value:      1.0e-9                  1.0e-9
Limits:             [1.0e-12 -]             [1.0e-12 -]
Vector:             no                      no
Vector_Bounds:      -                       -
Null_Allowed:       yes                     yes
```

Description: The digital sr-type flip flop is a one-bit, edge-triggered storage element which will store data whenever the clk input line transitions from low to high (ZERO to ONE). The value stored (i.e., the "out" value) will depend on the s and r input pin values, and will be:

```
out=ONE             if s=ONE and r=ZERO;
out=ZERO            if s=ZERO and r=ONE;
out=previous value  if s=ZERO and r=ZERO;
out=UNKNOWN         if s=ONE and r=ONE;
```

In addition, asynchronous set and reset signals exist, and each of the three methods of changing the stored output of the d_srff have separate load values and delays associated with them. You may also specify separate rise and fall delay values that are added to those specified for the input lines; these allow for more faithful reproduction of the output characteristics of different IC fabrication technologies.

Note that any UNKNOWN inputs other than s and r immediately cause the output to go UNKNOWN.

Example SPICE Usage:

```
a8 2 12 4 5 6 3 14 flop7
.model flop7 d_srff(clk_delay = 13.0e-9 set_delay = 25.0e-9
+                   reset_delay = 27.0e-9 ic = 2 rise_delay = 10.0e-9
+                   fall_delay = 3e-9)
```

12.4.16 D Latch

```
NAME_TABLE:
C_Function_Name:    cm_d_dlatch
Spice_Model_Name:   d_dlatch
Description:        "digital d-type latch"
PORT_TABLE:
Port Name:          data                    enable
Description:        "input data"            "enable input"
Direction:          in                      in
Default_Type:       d                       d
Allowed_Types:      [d]                     [d]
Vector:             no                      no
Vector_Bounds:      -                       -
Null_Allowed:       no                      no
PORT_TABLE:
Port Name:          set                     reset
Description:        "set"                   "reset"
Direction:          in                      in
Default_Type:       d                       d
Allowed_Types:      [d]                     [d]
Vector:             no                      no
Vector_Bounds:      -                       -
Null_Allowed:       yes                     yes
PORT_TABLE:
Port Name:          out                     Nout
Description:        "data output"           "inverter data output"
Direction:          out                     out
Default_Type:       d                       d
Allowed_Types:      [d]                     [d]
Vector:             no                      no
Vector_Bounds:      -                       -
Null_Allowed:       no                      no
PARAMETER_TABLE:
Parameter_Name:     data_delay
Description:        "delay from data"
Data_Type:          real
Default_Value:      1.0e-9
Limits:             [1.0e-12 -]
Vector:             no
Vector_Bounds:      -
Null_Allowed:       yes
PARAMETER_TABLE:
Parameter_Name:     enable_delay            set_delay
Description:        "delay from enable"     "delay from SET"
Data_Type:          real                    real
Default_Value:      1.0e-9                  1.0e-9
Limits:             [1.0e-12 -]             [1.0e-12 -]
Vector:             no                      no
```

```
Vector_Bounds:      -                       -
Null_Allowed:       yes                     yes
PARAMETER_TABLE:
Parameter_Name:     reset_delay             ic
Description:        "delay from RESET"      "output initial state"
Data_Type:          real                    boolean
Default_Value:      1.0e-9                  0
Limits:             [1.0e-12 -]             -
Vector:             no                      no
Vector_Bounds:      -                       -
Null_Allowed:       yes                     yes
PARAMETER_TABLE:
Parameter_Name:     data_load               enable_load
Description:        "data load (F)"         "enable load value (F)"
Data_Type:          real                    real
Default_Value:      1.0e-12                 1.0e-12
Limits:             -                       -
Vector:             no                      no
Vector_Bounds:      -                       -
Null_Allowed:       yes                     yes
PARAMETER_TABLE:
Parameter_Name:     set_load                reset_load
Description:        "set load value (F)"    "reset load (F)"
Data_Type:          real                    real
Default_Value:      1.0e-12                 1.0e-12
Limits:             -                       -
Vector:             no                      no
Vector_Bounds:      -                       -
Null_Allowed:       yes                     yes
PARAMETER_TABLE:
Parameter_Name:     rise_delay              fall_delay
Description:        "rise delay"            "fall delay"
Data_Type:          real                    real
Default_Value:      1.0e-9                  1.0e-9
Limits:             [1.0e-12 -]             [1.0e-12 -]
Vector:             no                      no
Vector_Bounds:      -                       -
Null_Allowed:       yes                     yes
```

Description: The digital d-type latch is a one-bit, level-sensitive storage element which will output the value on the data line whenever the enable input line is high (ONE). The value on the data line is stored (i.e., held on the out line) whenever the enable line is low (ZERO).

In addition, asynchronous set and reset signals exist, and each of the four methods of changing the stored output of the d_dlatch (i.e., data changing with enable=ONE, enable changing to ONE from ZERO with a new value on data, raising set and raising reset) have separate delays associated with them. You may also specify separate rise and fall delay values that are added to those specified for the input lines; these allow for more faithful

reproduction of the output characteristics of different IC fabrication technologies.
Note that any UNKNOWN inputs other than on the data line when enable=ZERO immediately cause the output to go UNKNOWN.

```
Example SPICE Usage:
a4 12 4 5 6 3 14 latch1
.model latch1 d_dlatch(data_delay = 13.0e-9 enable_delay = 22.0e-9
+                      set_delay = 25.0e-9
+                      reset_delay = 27.0e-9 ic = 2
+                      rise_delay = 10.0e-9 fall_delay = 3e-9)
```

12.4.17 Set-Reset Latch

```
NAME_TABLE:
C_Function_Name:    cm_d_srlatch
Spice_Model_Name:   d_srlatch
Description:        "digital sr-type latch"
PORT_TABLE:
Port Name:          s                       r
Description:        "set"                   "reset"
Direction:          in                      in
Default_Type:       d                       d
Allowed_Types:      [d]                     [d]
Vector:             yes                     yes
Vector_Bounds:      [2 -]                   r
Null_Allowed:       no                      no
PORT_TABLE:
Port Name:          enable
Description:        "enable"
Direction:          in
Default_Type:       d
Allowed_Types:      [d]
Vector:             no
Vector_Bounds:      -
Null_Allowed:       no
PORT_TABLE:
Port Name:          set                     reset
Description:        "set"                   "reset"
Direction:          in                      in
Default_Type:       d                       d
Allowed_Types:      [d]                     [d]
Vector:             no                      no
Vector_Bounds:      -                       -
Null_Allowed:       yes                     yes
PORT_TABLE:
Port Name:          out                     Nout
Description:        "data output"           "inverted data output"
Direction:          out                     out
```

```
Default_Type:       d                       d
Allowed_Types:      [d]                     [d]
Vector: no no
Vector_Bounds:      -                       -
Null_Allowed:       no                      no
PARAMETER_TABLE:
Parameter_Name:     sr_delay
Description:        "delay from s or r input change"
Data_Type:          real
Default_Value:      1.0e-9
Limits:             [1.0e-12 -]
Vector:             no
Vector_Bounds:      -
Null_Allowed:       yes
PARAMETER_TABLE:
Parameter_Name:     enable_delay            set_delay
Description:        "delay from enable"     "delay from SET"
Data_Type:          real                    real
Default_Value:      1.0e-9                  1.0e-9
Limits:             [1.0e-12 -]             [1.0e-12 -]
Vector:             no                      no
Vector_Bounds:      -                       -
Null_Allowed:       yes                     yes
PARAMETER_TABLE:
Parameter_Name:     reset_delay             ic
Description:        "delay from RESET"      "output initial state"
Data_Type:          real                    boolean
Default_Value:      1.0e-9                  0
Limits:             [1.0e-12 -]             -
Vector:             no                      no
Vector_Bounds:      -                       -
Null_Allowed:       yes                     yes
PARAMETER_TABLE:
Parameter_Name:     sr_load                  enable_load
Description:        "s & r input loads (F)" "enable load value (F)"
Data_Type:          real                     real
Default_Value:      1.0e-12                  1.0e-12
Limits:             -                        -
Vector:             no                       no
Vector_Bounds:      -                        -
Null_Allowed:       yes                      yes
PARAMETER_TABLE:
Parameter_Name:     set_load                reset_load
Description:        "set load value (F)"    "reset load (F)"
Data_Type:          real                    real
Default_Value:      1.0e-12                 1.0e-12
Limits:             -                       -
Vector:             no                      no
```

```
Vector_Bounds:      -                       -
Null_Allowed:       yes                     yes
PARAMETER_TABLE:
Parameter_Name:     rise_delay              fall_delay
Description:        "rise delay"            "fall delay"
Data_Type:          real                    real
Default_Value:      1.0e-9                  1.0e-9
Limits:             [1.0e-12 -]             [1.0e-12 -]
Vector:             no                      no
Vector_Bounds:      -                       -
Null_Allowed:       yes                     yes
```

Description: The digital sr-type latch is a one-bit, level-sensitive storage element which will output the value dictated by the state of the s and r pins whenever the enable input line is high (ONE). This value is stored (i.e., held on the out line) whenever the enable line is low (ZERO). The particular value chosen is as shown below:

```
s=ZERO, r=ZERO => out=current value (i.e., not change in output)
   s=ZERO, r=ONE  => out=ZERO
   s=ONE,  r=ZERO => out=ONE
   s=ONE,  r=ONE  => out=UNKNOWN
```

Asynchronous set and reset signals exist, and each of the four methods of changing the stored output of the d srlatch (i.e., s/r combination changing with enable=ONE, enable changing to ONE from ZERO with an output-changing combination of s and r, raising set and raising reset) have separate delays associated with them. You may also specify separate rise and fall delay values that are added to those specified for the input lines; these allow for more faithful reproduction of the output characteristics of different IC fabrication technologies.

Note that any UNKNOWN inputs other than on the s and r lines when enable=ZERO immediately cause the output to go UNKNOWN.

```
Example SPICE Usage:
a4 12 4 5 6 3 14 16 latch2
.model latch2 d_srlatch(sr_delay = 13.0e-9 enable_delay = 22.0e-9
+                       set_delay = 25.0e-9
+                       reset_delay = 27.0e-9 ic = 2
+                       rise_delay = 10.0e-9 fall_delay = 3e-9)
```

12.4.18 State Machine

```
NAME_TABLE:
C_Function_Name:    cm_d_state
Spice_Model_Name:   d_state
Description:        "digital state machine"
PORT_TABLE:
Port Name:          in                      clk
```

```
Description:        "input"                 "clock"
Direction:          in                      in
Default_Type:       d                       d
Allowed_Types:      [d]                     [d]
Vector:             yes                     no
Vector_Bounds:      [1 -]                   -
Null_Allowed:       yes                     no
PORT_TABLE:
Port Name:          reset                   out
Description:        "reset"                 "output"
Direction:          in                      out
Default_Type:       d                       d
Allowed_Types:      [d]                     [d]
Vector:             no                      yes
Vector_Bounds:      -                       [1 -]
Null_Allowed:       yes                     no
PARAMETER_TABLE:
Parameter_Name:     clk_delay               reset_delay
Description:        "delay from CLK"        "delay from RESET"
Data_Type:          real                    real
Default_Value:      1.0e-9                  1.0e-9
Limits:             [1.0e-12 -]             [1.0e-12 -]
Vector:             no                      no
Vector_Bounds:      -                       -
Null_Allowed:       yes                     yes
PARAMETER_TABLE:    Parameter_Name:         state_file
Description:        "state transition specification file name"
Data_Type:          string
Default_Value:      "state.txt"
Limits:             -
Vector:             no
Vector_Bounds:      -
Null_Allowed:       no
PARAMETER_TABLE:
Parameter_Name:     reset_state
Description:        "default state on RESET & at DC"
Data_Type:          int
Default_Value:      0
Limits:             -
Vector:             no
Vector_Bounds:      -
Null_Allowed:       no
PARAMETER_TABLE:
Parameter_Name:     input_load
Description:        "input loading capacitance (F)"
Data_Type:          real
Default_Value:      1.0e-12
Limits:             -
```

```
Vector:             no
Vector_Bounds:      -
Null_Allowed:       yes
PARAMETER_TABLE:
Parameter_Name:     clk_load
Description:        "clock loading capacitance (F)"
Data_Type:          real
Default_Value:      1.0e-12
Limits:             -
Vector:             no
Vector_Bounds:      -
Null_Allowed:       yes
PARAMETER_TABLE:
Parameter_Name:     reset_load
Description:        "reset loading capacitance (F)"
Data_Type:          real
Default_Value:      1.0e-12
Limits:             -
Vector:             no
Vector_Bounds:      -
Null_Allowed:       yes
```

Description: The digital state machine provides for straightforward descriptions of clocked combinational logic blocks with a variable number of inputs and outputs and with an unlimited number of possible states. The model can be configured to behave as virtually any type of counter or clocked combinatorial logic block and can be used to replace very large digital circuit schematics with an identically functional but faster representation.
The d state model is configured through the use of a state definition file (state.in) which resides in a directory of your choosing. The file defines all states to be understood by the model, plus input bit combinations which trigger changes in state. An example state.in file is shown below:

```
----------- begin file -------------
* This is an example state.in file. This file
* defines a simple 2-bit counter with one input. The
* value of this input determines whether the counter counts
* up (in = 1) or down (in = 0).
0 0s 0s 0 -> 3
        1 -> 1
1 0s 1z 0 -> 0
        1 -> 2
2 1z 0s 0 -> 1
        1 -> 3
3 1z 1z 0 -> 2
3 1z 1z 1 -> 0
------------------ end file ---------------
```

Several attributes of the above file structure should be noted. First, ALL LINES IN THE FILE MUST BE ONE OF FOUR TYPES. These are:

1. A comment, beginning with a "*" in the first column.
2. A header line, which is a complete description of the current state, the outputs corresponding to that state, an input value, and the state that the model will assume should that input be encountered. The first line of a state definition must ALWAYS be a header line.
3. A continuation line, which is a partial description of a state, consisting of an input value and the state that the model will assume should that input be encountered. Note that continuation lines may only be used after the initial header line definition for a state.
4. A line containing nothing but whitespace (space, form-feed, newline, carriage return, tab, vertical tab).

A line which is not one of the above will cause a file-loading error. Note that in the example shown, whitespace (any combination of blanks, tabs, commas) is used to separate values, and that the character "->" is used to underline the state transition implied by the input preceding it. This particular character is not critical in of itself, and can be replaced with any other character or non-broken combination of characters that you prefer (e.g. "==>", ">>", ":", "resolves_to", etc.)

The order of the output and input bits in the file is important; the first column is always interpreted to refer to the "zeroth" bit of input and output. Thus, in the file above, the output from state 1 sets out[0] to "0s", and out[1] to "1z".

The state numbers need not be in any particular order, but a state definition (which consists of the sum total of all lines which define the state, its outputs, and all methods by which a state can be exited) must be made on contiguous line numbers; a state definition cannot be broken into sub-blocks and distributed randomly throughout the file. On the other hand, the state definition can be broken up by as many comment lines as you desire.

Header files may be used throughout the state.in file, and continuation lines can be discarded completely if you so choose: continuation lines are primarily provided as a convenience.

```
Example SPICE Usage:
a4 [2 3 4 5] 1 12 [22 23 24 25 26 27 28 29] state1
.model state1 d_state(clk_delay = 13.0e-9 reset_delay = 27.0e-9
+                     state_file = newstate.txt reset_state = 2)
```

12.4.19 Frequency Divider

```
NAME_TABLE:
C_Function_Name:    cm_d_fdiv
Spice_Model_Name:   d_fdiv
Description:        "digital frequency divider"
PORT_TABLE:
Port Name:          freq_in                 freq_out
Description:        "frequency input"       "frequency output"
Direction:          in                      out
Default_Type:       d                       d
Allowed_Types:      [d]                     [d]
```

```
Vector:             no                      no
Vector_Bounds:      -                       -
Null_Allowed:       no                      no
PARAMETER_TABLE:
Parameter_Name:     div_factor              high_cycles
Description:        "divide factor"         "# of cycles for high out"
Data_Type:          int                     int
Default_Value:      2                       1
Limits:             [1 -]                   [1 div_factor-1]
Vector:             no                      no
Vector_Bounds:      -                       -
Null_Allowed:       yes                     yes
PARAMETER_TABLE:
Parameter_Name:    i_count
Description:       "divider initial count value"
Data_Type:         int
Default_Value:     0
Limits:            -
Vector:            no
Vector_Bounds:     -
Null_Allowed:      yes
PARAMETER_TABLE:
Parameter_Name:    rise_delay              fall_delay
Description:       "rise delay"            "fall delay"
Data_Type:         real                    real
Default_Value:     1.0e-9                  1.0e-9
Limits:            [1.0e-12 -]             [1.0e-12 -]
Vector:            yes                     yes
Vector_Bounds:     in                      in
Null_Allowed:      yes                     yes
PARAMETER_TABLE:
Parameter_Name:    freq_in_load
Description:       "freq_in load value (F)"
Data_Type:         real
Default_Value:     1.0e-12
Limits:            -
Vector:            no
Vector_Bounds:     -
Null_Allowed:      yes
```

Description: The digital frequency divider is a programmable step-down divider which accepts an arbitrary divisor (div_factor), a duty-cycle term (high_cycles), and an initial count value (i_count). The generated output is synchronized to the rising edges of the input signal. Rise delay and fall delay on the outputs may also be specified independently.

```
Example SPICE Usage:
a4 3 7 divider
.model divider d_fdiv(div_factor = 5 high_cycles = 3
```

```
+                    i_count = 4 rise_delay = 23e-9
+                    fall_delay = 9e-9)
```

12.4.20 RAM

```
NAME_TABLE:
C_Function_Name:    cm_d_ram
Spice_Model_Name:   d_ram
Description:        "digital random-access memory"
PORT_TABLE:
Port Name:          data_in                 data_out
Description:        "data input line(s)"    "data output line(s)"
Direction:          in                      out
Default_Type:       d                       d
Allowed_Types:      [d]                     [d]
Vector:             yes                     yes
Vector_Bounds:      [1 -]                   data_in
Null_Allowed:       no                      no
PORT_TABLE:
Port Name:          address                  write_en
Description:        "address input line(s)" "write enable line"
Direction:          in                       in
Default_Type:       d                        d
Allowed_Types:      [d]                      [d]
Vector:             yes                      no
Vector_Bounds:      [1 -]                    -
Null_Allowed:       no                       no
PORT_TABLE:
Port Name:          select
Description:        "chip select line(s)"
Direction:          in
Default_Type:       d
Allowed_Types:      [d]
Vector:             yes
Vector_Bounds:      [1 16]
Null_Allowed:       no
PARAMETER_TABLE:
Parameter_Name:     select_value
Description:        "decimal active value for select line comparison"
Data_Type:          int
Default_Value:      1
Limits:             [0 32767]
Vector:             no
Vector_Bounds:      -
Null_Allowed:       yes
PARAMETER_TABLE:
Parameter_Name:     ic
Description:        "initial bit state @ dc"
```

```
Data_Type:          int
Default_Value:      2
Limits:             [0 2]
Vector:             no
Vector_Bounds:      -
Null_Allowed:       yes
PARAMETER_TABLE:
Parameter_Name:     read_delay
Description:        "read delay from address/select/write.en active"
Data_Type:          real
Default_Value:      100.0e-9
Limits:             [1.0e-12 -]
Vector:             no
Vector_Bounds:      -
Null_Allowed:       yes
PARAMETER_TABLE:
Parameter_Name:     data_load                address_load
Description:        "data_in load value (F)" "addr. load value (F)"
Data_Type:          real                     real
Default_Value:      1.0e-12                  1.0e-12
Limits:             -                        -
Vector:             no                       no
Vector_Bounds:      -                        -
Null_Allowed:       yes                      yes
PARAMETER_TABLE:
Parameter_Name:     select_load
Description:        "select load value (F)"
Data_Type:          real
Default_Value:      1.0e-12
Limits:             -
Vector:             no
Vector_Bounds:      -
Null_Allowed:       yes
PARAMETER_TABLE:
Parameter_Name:     enable_load
Description:        "enable line load value (F)"
Data_Type:          real
Default_Value:      1.0e-12
Limits:             -
Vector:             no
Vector_Bounds:      -
Null_Allowed:       yes
```

Description: The digital RAM is an M-wide, N-deep random access memory element with programmable select lines, tristated data out lines, and a single write/~read line. The width of the RAM words (M) is set through the use of the word width parameter. The depth of the RAM (N) is set by the number of address lines input to the device. The value

of N is related to the number of address input lines (P) by the following equation:

$$2^P = N$$

There is no reset line into the device. However, an initial value for all bits may be specified by setting the ic parameter to either 0 or 1. In reading a word from the ram, the read delay value is invoked, and output will not appear until that delay has been satisfied. Separate rise and fall delays are not supported for this device.
Note that UNKNOWN inputs on the address lines are not allowed during a write. In the event that an address line does indeed go unknown during a write, THE ENTIRE CONTENTS OF THE RAM WILL BE SET TO UNKNOWN. This is in contrast to the data in lines being set to unknown during a write; in that case, only the selected word will be corrupted, and this is corrected once the data lines settle back to a known value. Note that protection is added to the write en line such that extended UNKNOWN values on that line are interpreted as ZERO values. This is the equivalent of a read operation and will not corrupt the contents of the RAM. A similar mechanism exists for the select lines. If they are unknown, then it is assumed that the chip is not selected.
Detailed timing-checking routines are not provided in this model, other than for the enable delay and select delay restrictions on read operations. You are advised, therefore, to carefully check the timing into and out of the RAM for correct read and write cycle times, setup and hold times, etc. for the particular device they are attempting to model.

```
Example SPICE Usage:
a4 [3 4 5 6] [3 4 5 6] [12 13 14 15 16 17 18 19] 30 [22 23 24] ram2
.model ram2 d_ram(select_value = 2 ic = 2 read_delay = 80e-9)
```

12.4.21 Digital Source

```
NAME_TABLE:
C_Function_Name:    cm_d_source
Spice_Model_Name:   d_source
Description:        "digital signal source"
PORT_TABLE:
Port Name:          out
Description:        "output"
Direction:          out
Default_Type:       d
Allowed_Types:      [d]
Vector:             yes
Vector_Bounds:      -
Null_Allowed:       no
PARAMETER_TABLE:
Parameter_Name:     input_file
Description:        "digital input vector filename"
Data_Type:          string
Default_Value:      "source.txt"
Limits:             -
Vector:             no
```

```
Vector_Bounds:      -
Null_Allowed:       no
PARAMETER_TABLE:
Parameter_Name:     input_load
Description:        "input loading capacitance (F)"
Data_Type:          real
Default_Value:      1.0e-12
Limits:             -
Vector:             no
Vector_Bounds:      -
Null_Allowed:       no
```

Description: The digital source provides for straightforward descriptions of digital signal vectors in a tabular format. The model reads input from the input file and, at the times specified in the file, generates the inputs along with the strengths listed.

The format of the input file is as shown below. Note that comment lines are delineated through the use of a single "*" character in the first column of a line. This is similar to the way the SPICE program handles comments.

```
* T       c  n  n  n . . .
* i       l  o  o  o . . .
* m       o  d  d  d . . .
* e       c  e  e  e . . .
*         k  a  b  c . . .
0.0000    Uu Uu Us Uu . . .
1.234e-9  0s 1s 1s 0z . . .
1.376e-9  0s 0s 1s 0z . . .
2.5e-7    1s 0s 1s 0z . . .
2.5006e-7 1s 1s 1s 0z . . .
5.0e-7    0s 1s 1s 0z . . .
```

Note that in the example shown, whitespace (any combination of blanks, tabs, commas) is used to separate the time and strength/state tokens. The order of the input columns is important; the first column is always interpreted to mean "time". The second through the N'th columns map to the out[0] through out[N-2] output nodes. A non-commented line which does not contain enough tokens to completely define all outputs for the digital source will cause an error. Also, time values must increase monotonically or an error will result in reading the source file.

Errors will also occur if a line exists in source.txt which is neither a comment nor vector line. The only exception to this is in the case of a line that is completely blank; this is treated as a comment (note that such lines often occur at the end of text within a file; ignoring these in particular prevents nuisance errors on the part of the simulator).

```
Example SPICE Usage:
a3 [2 3 4 5 6 7 8 9 10 11 12 13 14 15 16 17] input_vector
.model input_vector d_source(input_file = source_simple.text)
```

12.5 Predefined Node Types

The following prewritten node types are included with the XSPICE simulator. These, along with the digital node type built into the simulator, should provide you not only with valuable event-driven modeling capabilities, but also with examples to use for guidance in creating new UDN types.

12.5.1 Real Node Type

The "real" node type provides for event-driven simulation with double-precision floating point data. This type is useful for evaluating sampled-data filters and systems. The type implements all optional functions for User-Defined Nodes, including inversion and node resolution. For inversion, the sign of the value is reversed. For node resolution, the resultant value at a node is the sum of all values output to that node.

12.5.2 Int Node Type

The "int" node type provides for event-driven simulation with integer data. This type is useful for evaluating round-off error effects in sampled-data systems. The type implements all optional functions for User-Defined Nodes, including inversion and node resolution. For inversion, the sign of the integer value is reversed. For node resolution, the resultant value at a node is the sum of all values output to that node.

Chapter 13

Verilog A Device models

13.1 Introduction

The ngspice-adms interface will implement extra HICUM level0 and level2 (HICUM model web page), MEXTRAM(MEXTRAM model web page), EKV(EKV model web page) and PSP(NXP MOS model 9 web page) models written in Verilog-A behavior language.

13.2 adms

To compile Verilog-A compact models into ngspice-ready C models the the program admsXml is required. Details of this software are described in adms home page.

13.3 How to integrate a Verilog-A model into ngspice

13.3.1 How to setup a *.va model for ngspice

The root entry for new Verilog-A models is \src\spicelib\devices\adms. Below the modelname entry the Verilog-A code should reside in folder admsva
(e.g.: ng-spice-rework\src\spicelib\devices\adms\ekv\admsva\ekv.va). The file extension is fixed to .va.

Certain files must modified to create the interface to ngspice - see the guideline README.adms in the ngspice root.

13.3.2 Adding admsXml to your build environment

To facilitate the installation of adms, a source code package has been assembled for use with ngspice, available as a zip file for download. It is based on adms source code from the subversion repository downloaded on August 1st, 2010, and has been slightly modified (see ChangeLog).

Under OS LINUX (tested with SUSE 11.2, 64 bit) you may expand the zip file and run `./autogen_lin.sh`, followed by '`make`' and '`make install`'.

Under OS CYGWIN (tested with actual CYGWIN on MS Windows 7, 64 bit), please use `./autogen_cyg.sh`, followed by '`make`' and '`make install`'.

Under OS MINGW, a direct compilation would require the additional installation of perl module XML-LibXML which is not as straightforward as it should be. However you may start with a CYGWIN compile as described above. If you then go to your MSYS window, cd to the adms top directory and start `./mingw-compile.sh`, you will obtain admsXml.exe, copied to MSYS /bin, and you are ready to go. To facilitate installation under MS Windows, a **`admsXml.exe`** zipped binary is available. Just copy it to MSYS /bin directory and start working on your verilog models.

A short test of a successful installation is:

```
$ admsXml -v
```

```
$ [usage..]  release name="admsXml" version="2.3.0" date="Aug 4 2010"
time="10:24:18"
```

Compilation of admsXml with MS Visual Studio is not possible, because the source code has variable declarations not only at the top of a block, but deliberately also in the following lines. This is o.k. by the C99 standard, but not supported by MS Visual Studio.

Chapter 14

Mixed-Level Simulation (ngspice with TCAD)

14.1 Cider

Ngspice implements mixed-level simulation through the merging of its code with CIDER (details see chapt. 29).

CIDER is a mixed-level circuit and device simulator that provides a direct link between technology parameters and circuit performance. A mixed-level circuit and device simulator can provide greater simulation accuracy than a stand-alone circuit or device simulator by numerically modeling the critical devices in a circuit. Compact models can be used for noncritical devices.

CIDER couples the latest version of SPICE3 (version 3F.2) [JOHN92] to a internal C-based device simulator, DSIM. SPICE3 provides circuit analyses, compact models for semiconductor devices, and an interactive user interface. DSIM provides accurate, one- and two-dimensional numerical device models based on the solution of Poisson's equation, and the electron and hole current-continuity equations. DSIM incorporates many of the same basic physical models found in the the Stanford two-dimensional device simulator PISCES [PINT85]. Input to CIDER consists of a SPICE-like description of the circuit and its compact models, and PISCES-like descriptions of the structures of numerically modeled devices. As a result, CIDER should seem familiar to designers already accustomed to these two tools. For example, SPICE3F.2 input files should run without modification, producing identical results.

CIDER is based on the mixed-level circuit and device simulator CODECS [MAYA88] and is a replacement for this program. The basic algorithms of the two programs are the same. Some of the differences between CIDER and CODECS are described below. The CIDER input format has greater flexibility and allows increased access to physical model parameters. New physical models have been added to allow simulation of state-of-the-art devices. These include transverse field mobility degradation [GATE90] that is important in scaled-down MOSFETs and a polysilicon model for poly-emitter bipolar transistors. Temperature dependence has been included for most physical models over the range from -50°C to 150°C. The numerical models can be used to simulate all the basic types of semiconductor devices: resistors, MOS capacitors, diodes, BJTs, JFETs and MOSFETs. BJTs and JFETs can be modeled with or without a substrate contact. Support has been added for the management of device internal states. Post-processing of device states can be performed using the NUTMEG user interface of SPICE3.

Previously computed states can be loaded into the program to provide accurate initial guesses for subsequent analyses. Finally, numerous small bugs have been discovered and fixed, and the program has been ported to a wider variety of computing platforms.

Berkeley tradition calls for the naming of new versions of programs by affixing a (number, letter, number) triplet to the end of the program name. Under this scheme, CIDER should instead be named CODECS2A.l. However, tradition has been broken in this case because major incompatibilities exist between the two programs and because it was observed that the acronym CODECS is already used in the analog design community to refer to coder-decoder circuits.

Details of the basic semiconductor equations and the physical models used by CIDER are not provided in this manual. Unfortunately, no other single source exists which describes all of the relevant background material. Comprehensive reviews of device simulation can be found in [PINT90] and the book [SELB84]. CODECS and its inversion-layer mobility model are described in [MAYA88] and LGATE90], respectively. PISCES and its models are described in [PINT85]. Temperature dependencies for the PISCES models used by CIDER are available in [SOLL90].

14.2 GSS, Genius

For LINUX users the cooperation of the TCAD software GSS with ngspice might be of interest, see http://ngspice.sourceforge.net/gss.html. This project is no longer maintained however, but has moved into the Genius simulator, still available as open source cogenda genius.

Chapter 15

Analyses and Output Control

The command lines described in this chapter are specifying analyses and outpus within the circuit description file. They start with a "." (dot commands). Specifying analyses and plots (or tables) in the input file with dot commands is used with batch runs. Batch mode is entered when either the `-b` option is given or when the default input source is redirected from a file (see also chapt. 16.4.1). In batch mode, the analyses specified by the control lines in the input file (e.g. "`.ac`", "`.tran`", etc.) are immediately executed. If the `-r` rawfile option is given then all data generated is written to a ngspice rawfile. The rawfile may later be read by the interactive mode of ngspice using the "load" command (see 17.5.35). In this case, the `.save` line (see 15.5) may be used to record the value of internal device variables (see Appendix, chapter 30).

If a rawfile is not specified, then output plots (in "line-printer" form) and tables can be printed according to the `.print`, `.plot`, and `.four` control lines, described in chapter 15.5.

If ngspice is started in interactive mode (see chapt. 16.4.2), the dot commands are not executed immediately, but are waiting for manually giving the command "run".

A a much larger set of commands (including command similar to the dot commands) exists in the interactive command interpreter (detailed in section 17). These commands are used inside

```
.control
< commands >
.endc
```

sections (.control ... .endc sections) of the input file like a script. Ngspice may now be started in interactive mode (see chapt. 16.4.3), but still executing the dot commands immediately, if command "run" is added to the script.

15.1 Simulator Variables (.options)

Various parameters of the simulations available in Ngspice can be altered to control the accuracy, speed, or default values for some devices. These parameters may be changed via the "option" command (described in chapt. 17.5.39) or via the "`.options`" line:

General form:

```
.options opt1 opt2 ... (or opt=optval ...)
```

Examples:

```
.options reltol=.005 trtol=8
```

The options line allows the user to reset program control and user options for specific simulation purposes. Options specified to Ngspice via the "`option`" command (see chapt.) are also passed on as if specified on a `.options` line. Any combination of the following options may be included, in any order. "x" (below) represents some positive number.

15.1.1 General Options

ACCT causes accounting and run time statistics to be printed.

NOACCT no printing of statistics, no printing of the Initial Transient Solution.

NOINIT suppresses only printing of the Initial Transient Solution, maybe combined with ACCT.

LIST causes the summary listing of the input data to be printed.

NOMOD suppresses the printout of the model parameters.

NOPAGE suppresses page ejects.

NODE causes the printing of the node table.

OPTS causes the option values to be printed.

TEMP=x Resets the operating temperature of the circuit. The default value is 27 °*C* (300K). TEMP can be overridden by a temperature specification on any temperature dependent instance

TNOM=x resets the nominal temperature at which device parameters are measured. The default value is 27 °*C* (300 deg K). TNOM can be overridden by a specification on any temperature dependent device model.

15.1.2 DC Solution Options

The following options controls properties pertaining to DC analysis and algorithms. Since transient analysis is based on DC many of the options affect the latter one.

ABSTOL=x resets the absolute current error tolerance of the program. The default value is 1 pA.

GMIN=x resets the value of GMIN, the minimum conductance allowed by the program. The default value is 1.0e-12.

ITL1=x resets the dc iteration limit. The default is 100.

ITL2=x resets the dc transfer curve iteration limit. The default is 50.

KEEPOPINFO Retain the operating point information when either an AC, Distortion, or Pole-Zero analysis is run. This is particularly useful if the circuit is large and you do not want to run a (redundant) ".OP" analysis.

PIVREL=x resets the relative ratio between the largest column entry and an acceptable pivot value. The default value is 1.0e-3. In the numerical pivoting algorithm the allowed minimum pivot value is determined by EPSREL=AMAX1(PIVREL*MAXVAL, PIVTOL) where MAXVAL is the maximum element in the column where a pivot is sought (partial pivoting).

PIVTOL=x resets the absolute minimum value for a matrix entry to be accepted as a pivot. The default value is 1.0e-13.

RELTOL=x resets the relative error tolerance of the program. The default value is 0.001 (0.1%).

RSHUNT=x introduces a resistor from each analog node to ground. The value of the resistor should be high enough to not interfere with circuit operations.

VNTOL=x resets the absolute voltage error tolerance of the program. The default value is 1 μV.

15.1.2.1 Matrix Conditioning info

In most SPICE-based simulators, problems can arise with certain circuit topologies. One of the most common problems is the absence of a DC path to ground at some node. This may happen, for example, when two capacitors are connected in series with no other connection at the common node or when certain code models are cascaded. The result is an ill-conditioned or nearly singular matrix that prevents the simulation from completing. XSPICE introduces a new “rshunt” option to help eliminate this problem. When used, this option inserts resistors to ground at all the analog nodes in the circuit. In general, the value of “rshunt” should be set to some very high resistance (e.g. 1000 Meg Ohms or greater) so that the operation of the circuit is essentially unaffected, but the matrix problems are corrected. If you should encounter a “no DC path to ground” or a “matrix is nearly singular” error message with your circuit, you should try adding the following .option card to your circuit description deck.

```
.option rshunt = 1.0e12
```

Usually a value of 1.0e12 is sufficient to correct the matrix problems. However, if you still have problems, you may wish to try lowering this value to 1.0e10 or 1.0e9.

15.1.3 Transient Analysis Options

CHGTOL=x resets the charge tolerance of the program. The default value is 1.0e-14.

CONVSTEP=x relative step limit applied to code models.

CONVABSSTEP=x absolute step limit applied to code models.

GMINSTEPS=x [*] sets number of Gmin steps to be attempted. If the value is set to zero, the gmin stepping algorithm is disabled. In such case the source stepping algorithm becomes the standard when the standard procedure fails to converge to a solution.

ITL3=x resets the lower transient analysis iteration limit. the default value is 4. (Note: not implemented in Spice3).

ITL4=x resets the transient analysis time-point iteration limit. the default is 10.

ITL5=x resets the transient analysis total iteration limit. the default is 5000. Set ITL5=0 to omit this test. (Note: not implemented in Spice3).

ITL6=x [*] synonym for SRCSTEPS.

MAXEVITER=x sets the number of event iterations that are allowed at an analysis point

MAXOPALTER=x specifies the maximum number of analog/event alternations that the simulator can use in solving a hybrid circuit.

MAXORD=x [*] specifies the maximum order for the numerical integration method used by SPICE. Possible values for the Gear method are from 2 (the default) to 6. Using the value 1 with the trapezoidal method specifies backward Euler integration.

METHOD=name sets the numerical integration method used by SPICE. Possible names are "Gear" or "trapezoidal" (or just "trap"). The default is trapezoidal.

NOOPALTER=TRUE|FALSE if set to false alternations between analog/event are enabled.

RAMPTIME=x this options sets the rate of change of independent supplies and code model inductors and capacitors with initial conditions specified.

SRCSTEPS=x [*] a non-zero value causes SPICE to use a source-stepping method to find the DC operating point. Its value specifies the number of steps.

TRTOL=x resets the transient error tolerance. The default value is 7. This parameter is an estimate of the factor by which ngspice overestimates the actual truncation error. If XSPICE is enabled and 'A' devices included, the value is internally set to 1 for higher precision. This will cost a factor of two in cpu time during transient analysis.

15.1.4 MOSFET Specific options

BADMOS3 Use the older version of the MOS3 model with the "kappa" discontinuity.

DEFAD=x resets the value for MOS drain diffusion area; the default is 0.0.

DEFAS=x resets the value for MOS source diffusion area; the default is 0.0.

DEFL=x resets the value for MOS channel length; the default is 100.0 μm.

DEFW=x resets the value for MOS channel width; the default is 100.0 μm.

15.1.5 Transmission Lines Specific Options

TRYTOCOMPACT Applicable only to the LTRA model (see 6.2.1). When specified, the simulator tries to condense LTRA transmission line's past history of input voltages and currents.

15.1.6 Precedence of option and .options commands

There are various ways to set the above mentioned options in Ngspice. If no `option` or `.options` lines are set by the user, internal default values are given for each of the simulator variables.

You may set options in the init files **spinit** or **.spiceinit** via the `option` command (see chapt. 17.5.39). The values given here will supersede the default values. If you set options via the `.options` line in your input file, their values will supersede the default and init file data. Finally if you set options inside a .control ... .endc section, these values will supersede any values of the respective simulator variables given so far.

15.2 Initial Conditions

15.2.1 .NODESET: Specify Initial Node Voltage Guesses

General form:

```
.NODESET V(NODNUM)=VAL V(NODNUM)=VAL ...
```

Examples:

```
.NODESET V(12)=4.5 V(4)=2.23
```

The `.nodeset` line helps the program find the dc or initial transient solution by making a preliminary pass with the specified nodes held to the given voltages. The restriction is then released and the iteration continues to the true solution. The `.nodeset` line may be necessary for convergence on bistable or a-stable circuits. In general, this line should not be necessary.

15.2.2 .IC: Set Initial Conditions

General form:

```
.ic v(nodnum)=val v(nodnum)=val ...
```

Examples:

```
.ic v(11)=5 v(4)=-5 v(2)=2.2
```

The `.ic` line is for setting transient initial conditions. It has two different interpretations, depending on whether the `uic` parameter is specified on the `.tran` control line. Also, one should not confuse this line with the `.nodeset` line. The `.nodeset` line is only to help dc convergence, and does not affect final bias solution (except for multi-stable circuits). The two interpretations of this line are as follows:

1. When the `uic` parameter is specified on the `.tran` line, then the node voltages specified on the `.ic` control line are used to compute the capacitor, diode, BJT, JFET, and MOSFET initial conditions. This is equivalent to specifying the `ic=...` parameter on each device line, but is much more convenient. The `ic=...` parameter can still be specified and takes precedence over the `.ic` values. Since no dc bias (initial transient) solution is computed before the transient analysis, one should take care to specify all dc source voltages on the `.ic` control line if they are to be used to compute device initial conditions.

2. When the `uic` parameter is not specified on the `.tran` control line, the dc bias (initial transient) solution is computed before the transient analysis. In this case, the node voltages specified on the `.ic` control line is forced to the desired initial values during the bias solution. During transient analysis, the constraint on these node voltages is removed. This is the preferred method since it allows ngspice to compute a consistent dc solution.

15.3 Analyses

15.3.1 .AC: Small-Signal AC Analysis

General form:

```
.ac dec nd fstart fstop
.ac oct no fstart fstop
.ac lin np fstart fstop
```

Examples:

```
.ac dec 10 1 10K
.ac dec 10 1K 100MEG
.ac lin 100 1 100HZ
```

`dec` stands for decade variation, and `nd` is the number of points per decade. `oct` stands for octave variation, and `no` is the number of points per octave. `lin` stands for linear variation, and `np` is the number of points. `fstart` is the starting frequency, and `fstop` is the final frequency. If this line is included in the input file, ngspice performs an AC analysis of the circuit over the specified frequency range. Note that in order for this analysis to be meaningful, at least one independent source must have been specified with an ac value. Typically it does not make much sense to specify more than one ac source. If you do, the result will be a superposition of all sources, thus difficult to interpret.

Example:

```
Basic RC circuit
r 1 2 1.0
c 2 0 1.0
vin 1 0 dc 0 ac 1  $ <--- the ac source
.options noacct
.ac dec 10 .01 10
.plot ac  vdb(2) xlog
.end
```

In this ac (or 'small signal') analysis all non-linear devices are linearized around their actual dc operating point. All Ls and Cs get their imaginary value, depending on the actual frequency step. Each output vector will be calculated relative to the input voltage (current) given by the ac value (Vin equals to 1 in the example above). The resulting node voltages (and branch currents) are complex vectors. Therefore you have to be careful using the plot command. Especially you may use the variants of vxx(node) described in chapter 15.5.2 like `vdb(2)` (see example above).

15.3.2 .DC: DC Transfer Function

General form:

```
.dc srcnam vstart vstop vincr [src2 start2 stop2 incr2]
```

Examples:

```
.dc VIN 0.25 5.0 0.25
.dc VDS 0 10 .5 VGS 0 5 1
.dc VCE 0 10 .25 IB 0 10U 1U
.dc RLoad 1k 2k 100
.dc TEMP -15 75 5
```

The `.dc` line defines the dc transfer curve source and sweep limits (again with capacitors open and inductors shorted). **`srcnam`** is the name of an independent voltage or current source, a resistor or the circuit temperature. **`vstart`**, **`vstop`**, and **`vincr`** are the starting, final, and incrementing values respectively. The first example causes the value of the voltage source VIN to be swept from 0.25 Volts to 5.0 Volts in increments of 0.25 Volts. A second source (**`src2`**) may optionally be specified with associated sweep parameters. In this case, the first source is swept over its range for each value of the second source. This option can be useful for obtaining semiconductor device output characteristics. See the example circuit description on transistor characteristics (20.3).

15.3.3 .DISTO: Distortion Analysis

General form:

```
.disto dec nd fstart fstop <f2overf1>
.disto oct no fstart fstop <f2overf1>
.disto lin np fstart fstop <f2overf1>
```

Examples:

```
.disto dec 10 1kHz 100Mhz
.disto dec 10 1kHz 100Mhz 0.9
```

The `.disto` line does a small-signal distortion analysis of the circuit. A multi-dimensional Volterra series analysis is done using multi-dimensional Taylor series to represent the nonlinearities at the operating point. Terms of up to third order are used in the series expansions.

If the optional parameter **`f2overf1`** is not specified, `.disto` does a harmonic analysis - i.e., it analyses distortion in the circuit using only a single input frequency F_1, which is swept as

specified by arguments of the `.disto` command exactly as in the `.ac` command. Inputs at this frequency may be present at more than one input source, and their magnitudes and phases are specified by the arguments of the **`distof1`** keyword in the input file lines for the input sources (see the description for independent sources). (The arguments of the **`distof2`** keyword are not relevant in this case).

The analysis produces information about the AC values of all node voltages and branch currents at the harmonic frequencies $2F_1$ and , vs. the input frequency F_1 as it is swept. (A value of 1 (as a complex distortion output) signifies $\cos(2\pi(2F_1)t)$ at $2F_1$ and $\cos(2\pi(3F_1)t)$ at $3F_1$, using the convention that 1 at the input fundamental frequency is equivalent to $\cos(2\pi F_1 t)$.) The distortion component desired ($2F_1$ or $3F_1$) can be selected using commands in ngnutmeg, and then printed or plotted. (Normally, one is interested primarily in the magnitude of the harmonic components, so the magnitude of the AC distortion value is looked at). It should be noted that these are the AC values of the actual harmonic components, and are not equal to HD2 and HD3. To obtain HD2 and HD3, one must divide by the corresponding AC values at F_1, obtained from an `.ac` line. This division can be done using ngnutmeg commands.

If the optional **`f2overf1`** parameter is specified, it should be a real number between (and not equal to) 0.0 and 1.0; in this case, `.disto` does a spectral analysis. It considers the circuit with sinusoidal inputs at two different frequencies F_1 and F_2. F_1 is swept according to the `.disto` control line options exactly as in the `.ac` control line. F_2 is kept fixed at a single frequency as F_1 sweeps - the value at which it is kept fixed is equal to `f2overf1` times `fstart`. Each independent source in the circuit may potentially have two (superimposed) sinusoidal inputs for distortion, at the frequencies F_1 and F_2. The magnitude and phase of the F_1 component are specified by the arguments of the **`distof1`** keyword in the source's input line (see the description of independent sources); the magnitude and phase of the F_2 component are specified by the arguments of the **`distof2`** keyword. The analysis produces plots of all node voltages/branch currents at the intermodulation product frequencies $F_1 + F_2$, $F_1 - F_2$, and $(2F_1) - F_2$, vs the swept frequency F_1. The IM product of interest may be selected using the setplot command, and displayed with the print and plot commands. It is to be noted as in the harmonic analysis case, the results are the actual AC voltages and currents at the intermodulation frequencies, and need to be normalized with respect to `.ac` values to obtain the IM parameters.

If the **`distof1`** or **`distof2`** keywords are missing from the description of an independent source, then that source is assumed to have no input at the corresponding frequency. The default values of the magnitude and phase are 1.0 and 0.0 respectively. The phase should be specified in degrees.

It should be carefully noted that the number **`f2overf1`** should ideally be an irrational number, and that since this is not possible in practice, efforts should be made to keep the denominator in its fractional representation as large as possible, certainly above 3, for accurate results (i.e., if **`f2overf1`** is represented as a fraction A/B, where A and B are integers with no common factors, B should be as large as possible; note that $A < B$ because **`f2overf1`** is constrained to be < 1). To illustrate why, consider the cases where **`f2overf1`** is 49/100 and 1/2. In a spectral analysis, the outputs produced are at $F_1 + F_2$, $F_1 - F_2$ and $2F_1 - F_2$. In the latter case, $F_1 - F_2 = F_2$, so the result at the $F_1 - F_2$ component is erroneous because there is the strong fundamental F_2 component at the same frequency. Also, $F_1 + F_2 = 2F_1 - F_2$ in the latter case, and each result is erroneous individually. This problem is not there in the case where **`f2overf1`** = 49/100, because $F_1 - F_2 = 51/100\ F_1 <> 49/100\ F_1 = F_2$. In this case, there are two very closely spaced frequency components at F_2 and $F_1 - F_2$. One of the advantages of the Volterra series technique is that it computes distortions at mix frequencies expressed symbolically (i.e.

$nF_1 + mF_2$), therefore one is able to obtain the strengths of distortion components accurately even if the separation between them is very small, as opposed to transient analysis for example. The disadvantage is of course that if two of the mix frequencies coincide, the results are not merged together and presented (though this could presumably be done as a postprocessing step). Currently, the interested user should keep track of the mix frequencies himself or herself and add the distortions at coinciding mix frequencies together should it be necessary.

15.3.4 .NOISE: Noise Analysis

General form:

```
.noise v(output <,ref>) src ( dec | lin | oct ) pts fstart fstop
+ <pts_per_summary>
```

Examples:

```
.noise v(5) VIN dec 10 1kHZ 100Mhz
.noise v(5,3) V1 oct 8 1.0 1.0e6 1
```

The `.noise` line does a noise analysis of the circuit. **`output`** is the node at which the total output noise is desired; if **`ref`** is specified, then the noise voltage **`v(output) - v(ref)`** is calculated. By default, **`ref`** is assumed to be ground. **`src`** is the name of an independent source to which input noise is referred. **`pts`**, **`fstart`** and **`fstop`** are `.ac` type parameters that specify the frequency range over which plots are desired. **`pts_per_summary`** is an optional integer; if specified, the noise contributions of each noise generator is produced every **`pts_per_summary`** frequency points. The `.noise` control line produces two plots:

1. one for the Noise Spectral Density curves and
2. one for the total Integrated Noise over the specified frequency range.

All noise voltages/currents are in squared units (V^2/Hz and A^2/Hz for spectral density, V^2 and A^2 for integrated noise).

15.3.5 .OP: Operating Point Analysis

General form:

```
.op
```

The inclusion of this line in an input file directs ngspice to determine the dc operating point of the circuit with inductors shorted and capacitors opened.

Note: a DC analysis is automatically performed prior to a transient analysis to determine the transient initial conditions, and prior to an AC small-signal, Noise, and Pole-Zero analysis to determine the linearized, small-signal models for nonlinear devices (see the KEEPOPINFO variable 15.1.2).

15.3.6 .PZ: Pole-Zero Analysis

General form:

```
.pz node1 node2 node3 node4 cur pol
.pz node1 node2 node3 node4 cur zer
.pz node1 node2 node3 node4 cur pz
.pz node1 node2 node3 node4 vol pol
.pz node1 node2 NODE3 node4 vol zer
.pz node1 node2 node3 node4 vol pz
```

Examples:

```
.pz 1 0 3 0 cur pol
.pz 2 3 5 0 vol zer
.pz 4 1 4 1 cur pz
```

`cur` stands for a transfer function of the type (output voltage)/(input current) while `vol` stands for a transfer function of the type (output voltage)/(input voltage). `pol` stands for pole analysis only, `zer` for zero analysis only and `pz` for both. This feature is provided mainly because if there is a nonconvergence in finding poles or zeros, then, at least the other can be found. Finally, `node1` and `node2` are the two input nodes and `node3` and `node4` are the two output nodes. Thus, there is complete freedom regarding the output and input ports and the type of transfer function.

In interactive mode, the command syntax is the same except that the first field is pz instead of `.pz`. To print the results, one should use the command "print all".

15.3.7 .SENS: DC or Small-Signal AC Sensitivity Analysis

General form:

```
.SENS OUTVAR
.SENS OUTVAR AC DEC ND FSTART FSTOP
.SENS OUTVAR AC OCT NO FSTART FSTOP
.SENS OUTVAR AC LIN NP FSTART FSTOP
```

Examples:

```
.SENS V(1,OUT)
.SENS V(OUT) AC DEC 10 100 100k
.SENS I(VTEST)
```

The sensitivity of OUTVAR to all non-zero device parameters is calculated when the SENS analysis is specified. OUTVAR is a circuit variable (node voltage or voltage-source branch current). The first form calculates sensitivity of the DC operating-point value of OUTVAR. The second form calculates sensitivity of the AC values of OUTVAR. The parameters listed for AC sensitivity are the same as in an AC analysis (see ".AC" above). The output values are in dimensions of change in output per unit change of input (as opposed to percent change in output or per percent change of input).

15.3.8 .TF: Transfer Function Analysis

General form:

```
.tf outvar insrc
```

Examples:

```
.tf v(5, 3) VIN
.tf i(VLOAD) VIN
```

The `.tf` line defines the small-signal output and input for the dc small-signal analysis. **`outvar`** is the small signal output variable and **`insrc`** is the small-signal input source. If this line is included, ngspice computes the dc small-signal value of the transfer function (output/input), input resistance, and output resistance. For the first example, ngspice would compute the ratio of V(5, 3) to VIN, the small-signal input resistance at VIN, and the small signal output resistance measured across nodes 5 and 3.

15.3.9 .TRAN: Transient Analysis

General form:

```
.tran tstep tstop <tstart <tmax>> <uic>
```

Examples:

```
.tran 1ns 100ns
.tran 1ns 1000ns 500ns
.tran 10ns 1us
```

`tstep` is the printing or plotting increment for line-printer output. For use with the post-processor, **`tstep`** is the suggested computing increment. **`tstop`** is the final time, and **`tstart`** is the initial time. If **`tstart`** is omitted, it is assumed to be zero. The transient analysis always begins at time zero. In the interval <zero, **`tstart`**>, the circuit is analyzed (to reach a steady state), but no outputs are stored. In the interval <**`tstart`**, **`tstop`**>, the circuit is analyzed and outputs are stored. **`tmax`** is the maximum stepsize that ngspice uses; for default, the program chooses either **`tstep`** or (**`tstop`**-**`tstart`**)/50.0, whichever is smaller. **`tmax`** is useful when one wishes to guarantee a computing interval which is smaller than the printer increment, **`tstep`**.

`uic` (use initial conditions) is an optional keyword which indicates that the user does not want ngspice to solve for the quiescent operating point before beginning the transient analysis. If this keyword is specified, ngspice uses the values specified using IC=... on the various elements as the initial transient condition and proceeds with the analysis. If the `.ic` control line has been specified, then the node voltages on the `.ic` line are used to compute the initial conditions for the devices. Look at the description on the `.ic` control line for its interpretation when **`uic`** is not specified.

15.3.10 Transient noise analysis (at low frequency)

In contrast to the analysis types described above the transient noise simulation (noise current or voltage versus time) is not implemented as a dot command, but is integrated with the indepen-

dent voltage source vsrc (isrc still not yet available) (see 4.1.7) and used in combination with the **.tran** transient analysis (15.3.9).

Transient noise analysis deals with noise currents or voltages added to your circuits as a time dependent signal of randomly generated voltage excursion on top of a fixed dc voltage. The sequence of voltage values has random amplitude, but equidistant time intervals, selectable by the user (parameter NT). The resulting voltage waveform is differentiable and thus does not require any modifications of the matrix solving algorithms.

White noise is generated by the ngspice random number generator, applying the Box-Muller transform. Values are generated on the fly, each time when a breakpoint is hit.

The 1/f noise is generated with an algorithm provided by N. J. Kasdin ("Discrete simulation of colored noise and stochastic processes and $1/f^a$ power law noise generation", Proceedings of the IEEE, Volume 83, Issue 5, May 1995 Page(s):802 – 827). The noise sequence (one for each voltage/current source with 1/f selected) is generated upon start up of the simulator and stored for later use. The number of point is determined by the total simulation time divided by NT, rounded up the the nearest power of 2. Each time a breakpoint ($n \star NT$, relevant to the noise signal) is hit, the next value is retrieved from the sequence.

If you want a random, but reproducible sequence, you may select a seed value for the random number generator by adding

```
set rndseed=nn
```

to the spinit or .spiceinit file, nn being a positive integer number.

The transient noise analysis will allow the simulation of the three most important noise sources. Thermal noise is described by the Gaussian white noise. Flicker noise (pink noise or 1 over f noise) with an exponent between 0 and 2 is provided as well. Shot noise is dependent on the current flowing through a device and may be simulated by applying a non-linear source as demonstrated in the following example:

Example:

```
* Shot noise test with B source, diode
* voltage on device (diode, forward)
Vdev out 0 DC 0 PULSE(0.4 0.45 10u)
* diode, forward direction, to be modeled with noise
D1 mess 0 DMOD
.model DMOD D IS=1e-14 N=1
X1 0 mess out ishot
* device between 1 and 2
* new output terminals of device including noise: 1 and 3
.subckt ishot 1 2 3
* white noise source with rms 1V
* 20000 sample points
VNG 0 11 DC 0 TRNOISE(1 1n 0 0)
*measure the current i(v1)
V1 2 3 DC 0
* calculate the shot noise
* sqrt(2*current*q*bandwidth)
BI 1 3 I=sqrt(2*abs(i(v1))*1.6e-19*1e7)*v(11)
.ends ishot

.tran 1n 20u
.control
run
plot (-1)*i(vdev)
.endc
.end
```

The selection of the delta time step (NT) is worth discussing. Gaussian white noise has unlimited bandwidth and thus unlimited energy content. This is unrealistic. The bandwidth of real noise is limited, but it is still called "White" if it is the same level throughout the frequency range of interest, e.g. the bandwidth of your system. Thus you may select NT to be a factor of 10 smaller than the frequency limit of your circuit. A thorough analysis is still needed to clarify the appropriate factor! The transient method is probably most suited for circuits including switches, which are not amenable to the small signal .NOISE analysis (chapter 15.3.4).

This is the price you have to pay for transient noise analysis: the number of required time steps for simulation will increase, and thus the simulation time. But modern computers deliver a lot of speed, and it may be well worth of trying and experimenting.

In addition to white and 1/f noise the independent voltage and current sources offer a random telegraph signal (RTS) noise source, also known as burst noise or popcorn noise, again for transient analysis. For each voltage (current) source offering RTS noise an individual noise amplitude is required for input, as well as a mean capture time and a mean emission time. The amplitude resembles the influence of a single trap on the current or voltage. The capture and emission times emulate the filling and emptying of the trap, typically following a Poisson process. They are generated from an random exponential distribution with their respective mean values given by the user. To simulate an ensemble of traps, you may combine several current or voltage sources with different parameters.

All three sources (white, 1/f, and RTS) may be combined in a single command line.

RTS noise example:

```
* white noise, 1/f noise, RTS noise

* voltage source
VRTS2 13 12 DC 0 trnoise(0 0 0 0 5m 18u 30u)
VRTS3 11 0 DC 0 trnoise(0 0 0 0 10m 20u 40u)
VALL 12 11 DC 0 trnoise(1m 1u 1.0 0.1m 15m 22u 50u)

VW1of 21 0 DC  trnoise(1m 1u 1.0 0.1m)

* current source
IRTS2 10 0 DC 0 trnoise(0 0 0 0 5m 18u 30u)
IRTS3 10 0 DC 0 trnoise(0 0 0 0 10m 20u 40u)
IALL 10 0 DC 0 trnoise(1m 1u 1.0 0.1m 15m 22u 50u)
R10 10 0 1

IW1of 9 0 DC  trnoise(1m 1u 1.0 0.1m)
Rall 9 0 1

* sample points
.tran 1u 500u

.control
run
plot v(13) v(21)
plot v(10) v(9)
.endc

.end
```

Some details on RTS noise modeling are available in a recent article [20], available here.

Anyhow this transient noise feature is still experimental!

The following questions (among others) are to be solved:

- clarify the theoretical background
- noise limit of plain ngspice (numerical solver, fft etc.)
- time step (NT) selection
- calibration of noise spectral density
- how to generate noise from a transistor model
- application benefits and limits

15.3.11 .PSS: Periodic Steady State Analysis

(Experimental code, not yet made publicly available!)

General form:

```
.pss gfreq tstab oscnob psspoints harms sciter steadycoeff <uic>
```

Examples:

```
.pss 150 200e-3 2 1024 11 50 5e-3 uic
.pss 624e6 1u v_plus 1024 10 150 5e-3 uic
.pss 624e6 500n bout 1024 10 100 5e-3 uic
```

gfreq is guessed frequency of fundamental suggested by user. When performing transient analysis the PSS algorithm tries to infer a new rough guess **rgfreq** on the fundamental. If **gfreq** is out of $\pm 10\%$ with respect to **rgfreq** then **gfreq** is discarded.

tstab is stabilization time before the shooting begin to search for the PSS. It has to be noticed that this parameter heavily influence the possibility to reach the PSS. Thus is a good practice to ensure a circuit to have a right **tstab**, e.g. perfoming a separate TRAN analysis before to run PSS analysis.

oscnob is the node or branch where the oscillation dynamic is expected. PSS analysis will give a brief report of harmonic content at this node or branch.

psspoints is number of step in evaluating predicted period after convergence is reached. It is useful only in Time Domain plots. However this number should be higher than 2 times the requested **harms**. Otherwise the PSS analysis will properly adjust it.

harms number of harmonics to be calculated as requested by the user.

sciter number of allowed shooting cycle iterations. Default is 50.

steady_coeff is the weighting ceofficient for calculating the Global Convergence Error (GCE) which is the reference value in order to infer is convergence is reached. The lower **steady_coeff** is set, the higher the accuracy of predicted frequency can be reached but at longer analysis time and **sciter** number. Default is 1e-3.

uic (use initial conditions) is an optional keyword which indicates that the user does not want ngspice to solve for the quiescent operating point before beginning the transient analysis. If this keyword is specified, ngspice uses the values specified using IC=... on the various elements as the initial transient condition and proceeds with the analysis. If the `.ic` control line has been specified, then the node voltages on the `.ic` line are used to compute the initial conditions for the devices. Look at the description on the `.ic` control line for its interpretation when **uic** is not specified.

15.4 Measurements after Op, Ac, and Transient Analysis

15.4.1 .meas(ure)

The **.meas** or **.measure** statement (and its equivalent **meas** command, see chapt. 17.5.36) are used to analyze the output data of a tran, ac, or dc simulation. The command is executed immediately after the simulation has finished.

15.4.2 batch versus interactive mode

.meas analysis may not be used in batch mode (`-b` command line option), if an output file (rawfile) is given at the same time (`-r rawfile` command line option). In this batch mode ngspice will write its simulation output data directly to the output file. The data is not kept in memory, thus is no longer available for further analysis. This is made to allow a very large output stream with only a relatively small memory usage. For .meas to be active you need to run the batch mode with a `.plot` or `.print` command. A better alternative may be to start ngspice in interactive mode.

If you need batch like operation, you may add a `.control ... .endc` section to the input file:

Example:

```
*input file
...
.tran 1ns 1000ns
...
********************************
.control
run
write outputfile data
.endc
********************************
.end
```

and start ngspice in interactive mode, e.g. by running the command

```
ngspice inputfile .
```

.meas<ure> then prints its user-defined data analysis to the standard output. The analysis includes propagation, delay, rise time, fall time, peak-to-peak voltage, minimum or maximum voltage, the integral or derivative over a specified period and several other user defined values.

15.4.3 General remarks

The measure type **{DC|AC|TRAN|SP}** depends on the data which are to be evaluated, either originating from a dc analysis, an ac analysis, a transient simulation. **SP** to analyse a spectrum from the `spec` or `fft` commands is only available when executed in a `meas` command, see 17.5.36.

result will be a vector containing the result of the measurement. **trig_variable**, **targ_variable**, and **out_variable** are vectors stemming from the simulation, e.g. a voltage vector v(out).

VAL=val expects a real number val. It may be as well a parameter in ” or {} expanding to a real number.

TD=td and **AT=time** expect a time value if measure type is **tran**. For **ac** and **sp AT** will be a frequency value, TD is ignored. For **dc** analysis **AT** is a voltage (or current), **TD** is ignored as well.

CROSS=# requires an integer number #. **CROSS=LAST** is possible as well. The same is expected by **RISE** and **FALL**.

Frequency and time values may start at 0 and extend to positive real numbers. Voltage (or current) inputs for the independent (scale) axis in a dc analysis may start or end at arbitrary real valued numbers.

*

****

Be careful because not all of the .measure commands have been implemented so far!

'deriv' and 'error' is missing

****

*

15.4.4 Input

In the following lines you will get some explanation on the .measure commands. A simple simulation file with two sines of different frequencies may serve as an example. The transient simulation delivers time as the independent variable and two voltages as output (dependent variables).

Input file:

```
File: simple-meas-tran.sp
* Simple .measurement examples
* transient simulation of two sine signals with different
  frequencies
vac1 1 0 DC 0 sin(0 1 1k 0 0)
vac2 2 0 DC 0 sin(0 1.2 0.9k 0 0)
.tran 10u 5m
*
.measure tran ... $ for the different inputs see below!
*
.control
run
plot v(1) v(2)
.endc
.end
```

After displaying the general syntax of the .measurement statement, some examples are posted, referring to the input file given above.

15.4.5 Trig Targ

.measure according to general form 1 measures the difference in dc voltage, frequency or time between two points selected from one or two output vectors. The current examples all are using transient simulation. Measurements for **tran** analysis start after a delay time td. If you run other examples with **ac** simulation or **sp**ectrum analysis, time may be replaced by frequency, after a **dc** simulation the independent variable may become a voltage or current.

General form 1:

```
.MEASURE {DC|AC|TRAN|SP} result TRIG trig_variable VAL=val <TD=
    td> <CROSS=# | CROSS=LAST> <RISE=# | RISE=LAST> <FALL=# |
    FALL=LAST> <TRIG AT=time> TARG targ_variable VAL=val <TD=td>
     <CROSS=# | CROSS=LAST> <RISE=# | RISE=LAST> <FALL=# | FALL=
    LAST> <TARG AT=time>
```

Measure statement example (for use in the input file given above):

```
.measure tran tdiff TRIG v(1) VAL=0.5 RISE=1 TARG v(1) VAL=0.5 RISE=2
```

measures the time difference between v(1) reaching 0.5 V for the first time on its first rising slope (TRIG) versus reaching 0.5 V again on its second rising slope (TARG). I.e. it measures the signal period.

Output:

```
tdiff = 1.000000e-003 targ= 1.083343e-003 trig= 8.334295e-005
```

Measure statement example:

```
.measure tran tdiff TRIG v(1) VAL=0.5 RISE=1 TARG v(1) VAL=0.5 RISE=3
```

measures the time difference between v(1) reaching 0.5 V for the first time on its rising slope versus reaching 0.5 V on its rising slope for the third time (i.e. two periods).

Measure statement:

```
.measure tran tdiff TRIG v(1) VAL=0.5 RISE=1 TARG v(1) VAL=0.5 FALL=1
```

measures the time difference between v(1) reaching 0.5V for the first time on its rising slope versus reaching 0.5 V on its first falling slope.

Measure statement:

```
.measure tran tdiff TRIG v(1) VAL=0 FALL=3 TARG v(2) VAL=0 FALL=3
```

measures the time difference between v(1) reaching 0V its third falling slope versus v(2) reaching 0 V on its third falling slope.

Measure statement:

```
.measure tran tdiff TRIG v(1) VAL=-0.6 CROSS=1 TARG v(2) VAL=-0.8 CROSS=1
```

measures the time difference between v(1) crossing -0.6 V for the first time (any slope) versus v(2) crossing -0.8 V for the first time (any slope).

Measure statement:

```
.measure tran tdiff TRIG AT=1m TARG v(2) VAL=-0.8 CROSS=3
```

measures the time difference between the time point 1ms versus the time when v(2) crosses -0.8 V for the third time (any slope).

15.4.6 Find ... When

The **FIND** and **WHEN** functions allow to measure any dependent or independent time, frequency, or dc parameter, when two signals cross each other or a signal crosses a given value. Measurements start after a delay TD and may be restricted to a range between FROM and TO.

General form 2:

```
.MEASURE {DC|AC|TRAN|SP} result WHEN out_variable=val <TD=td> <
   FROM=val> <TO=val> <CROSS=# | CROSS=LAST> <RISE=# | RISE=
   LAST> <FALL=# | FALL=LAST>
```

Measure statement:

```
.measure tran teval WHEN v(2)=0.7 CROSS=LAST
```

measures the time point when v(2) crosses 0.7 V for the last time (any slope).

General form 3:

```
.MEASURE {DC|AC|TRAN|SP} result WHEN out_variable=out_variable2
      <TD=td> <FROM=val> <TO=val> <CROSS=# | CROSS=LAST> <RISE=#
     | RISE=LAST> <FALL=# | FALL=LAST>
```

Measure statement:

```
.measure tran teval WHEN v(2)=v(1) RISE=LAST
```

measures the time point when v(2) and v(1) are equal, v(2) rising for the last time.

General form 4:

```
.MEASURE {DC|AC|TRAN|SP} result FIND out_variable WHEN
   out_variable2=val <TD=td> <FROM=val> <TO=val> <CROSS=# |
   CROSS=LAST> <RISE=# | RISE=LAST> <FALL=# | FALL=LAST>
```

Measure statement:

```
.measure tran yeval FIND v(2) WHEN v(1)=-0.4 FALL=LAST
```

returns the dependent (y) variable drawn from v(2) at the time point when v(1) equals a value of -0.4, v(1) falling for the last time.

General form 5:

```
.MEASURE {DC|AC|TRAN|SP} result FIND out_variable WHEN
   out_variable2=out_variable3  <TD=td> <CROSS=# | CROSS=LAST>
   <RISE=#|RISE=LAST> <FALL=#|FALL=LAST>
```

Measure statement:

```
.measure tran yeval FIND v(2) WHEN v(1)=v(3) FALL=2
```

returns the dependent (y) variable drawn from v(2) at the time point when v(1) crosses v(3), v(1) falling for the second time.

General form 6:

```
.MEASURE {DC|AC|TRAN|SP} result FIND out_variable AT=val
```

Measure statement:

```
.measure tran yeval FIND v(2) AT=2m
```

returns the dependent (y) variable drawn from v(2) at the time point 2 ms (given by AT=time).

15.4.7 AVG|MIN|MAX|PP|RMS|MIN_AT|MAX_AT

General form 7:

```
.MEASURE {DC|AC|TRAN|SP} result {AVG|MIN|MAX|PP|RMS|MIN_AT|
   MAX_AT} out_variable <TD=td> <FROM=val> <TO=val>
```

Measure statements:

```
.measure tran ymax MAX v(2) from=2m to=3m
```

returns the maximum value of v(2) inside the time interval between 2 ms and 3 ms.

```
.measure tran tymax MAX_AT v(2) from=2m to=3m
```

returns the time point of the maximum value of v(2) inside the time interval between 2 ms and 3 ms.

```
.measure tran ypp PP v(1) from=2m to=4m
```

returns the peak to peak value of v(1) inside the time interval between 2 ms and 4 ms.

```
.measure tran yrms RMS v(1) from=2m to=4m
```

returns the root mean square value of v(1) inside the time interval between 2 ms and 4 ms.

```
.measure tran yavg AVG v(1) from=2m to=4m
```

returns the average value of v(1) inside the time interval between 2 ms and 4 ms.

15.4.8 Integ

General form 8:

```
.MEASURE {DC|AC|TRAN|SP} result INTEG<RAL> out_variable <TD=td>
    <FROM=val> <TO=val>
```

Measure statement:

```
.measure tran yint INTEG v(2) from=2m to=3m
```

returns the area under v(2) inside the time interval between 2 ms and 3 ms.

15.4.9 param

General form 9:

```
.MEASURE {DC|AC|TRAN|SP} result  param='expression'
```

Measure statement:

```
.param fval=5
.measure tran yadd param='fval + 7'
```

will evaluate the given expression fval + 7 and return the value 12.

```
.param vout_diff=50k
.meas tran bw_chk param='(vout_diff < 100k) ?  1 :  0'
```

will evaluate the given ternary function and return the value 1.

'Expression' is evaluated according to the rules given in chapt. 2.8.5 during start up of ngspice. Thus it may not contain vectors like v(10), e.g. anything resulting from a simulation.

15.4.10 par('expression')

The `par('expression')` option (15.5.6) allows to use algebraic expressions in the `.measure` lines. Every out_variable may be replaced by par('expression') within the general forms 1-9 described above. Internally par('expression') will be substituted by a vector according to the rules of the B source (chapt. 5.1). A typical example of the general form is shown below:

General form 10:

```
.MEASURE {DC|AC|TRAN|SP} result  FIND par('expression') AT=val
```

Measure statement:

```
.measure tran vtest find par('(v(2)*v(1))') AT=2.3m
```

will return the product of the two voltages at time point 2.3 ms.

15.4.11 Deriv

General form:

```
.MEASURE {DC|AC|TRAN|SP} result DERIV<ATIVE> out_variable AT=
   val

.MEASURE {DC|AC|TRAN|SP} result DERIV<ATIVE> out_variable WHEN
   out_variable2=val     + <TD=td>
+ <CROSS=# | CROSS=LAST> <RISE=#|RISE=LAST> <FALL=#|FALL=LAST>

.MEASURE {DC|AC|TRAN|SP} result DERIV<ATIVE> out_variable
+ WHEN out_variable2=out_variable3
+ <TD=td>
+ <CROSS=# | CROSS=LAST> <RISE=#|RISE=LAST> <FALL=#|FALL=LAST>
```

`.MEASURE {DC|AC|TRAN|SP} result DERIV<ATIVE>` **... is not yet available.**

15.4.12 More examples

Some other examples, also showing the use of parameters, are given below. Corresponding demonstration input files are distributed with ngspice in folder /examples/measure.

Other examples:

```
.meas tran inv_delay2 trig v(in) val='vp/2' td=1n fall=1 targ v
   (out)
+val='vp/2' rise=1
.meas tran test_data1 trig AT = 1n targ v(out) val='vp/2' rise
   =3
.meas tran out_slew trig v(out) val='0.2*vp' rise=2 targ v(out)
+val='0.8*vp' rise=2
.meas tran delay_chk param='(inv_delay < 100ps) ? 1 : 0'
.meas tran skew when v(out)=0.6
.meas tran skew2 when v(out)=skew_meas
.meas tran skew3 when v(out)=skew_meas fall=2
.meas tran skew4 when v(out)=skew_meas fall=LAST
.meas tran skew5 FIND v(out) AT=2n
.meas tran v0_min  min i(v0) from='dfall' to='dfall+period'
.meas tran v0_avg avg i(v0) from='dfall' to='dfall+period'
.meas tran v0_integ integ i(v0) from='dfall' to='dfall+period'
.meas tran v0_rms rms i(v0) from='dfall' to='dfall+period'
.meas dc is_at FIND i(vs) AT=1
.meas dc is_max max i(vs) from=0 to=3.5
.meas dc vds_at when i(vs)=0.01
.meas ac vout_at FIND v(out) AT=1MEG
.meas ac vout_atd FIND vdb(out) AT=1MEG
.meas ac vout_max max v(out) from=1k to=10MEG
.meas ac freq_at when v(out)=0.1
.meas ac vout_diff trig v(out) val=0.1 rise=1 targ v(out) val
   =0.1 fall=1
.meas ac fixed_diff trig AT = 10k targ v(out) val=0.1 rise=1
.meas ac vout_avg  avg   v(out)  from=10k to=1MEG
.meas ac vout_integ integ v(out) from=20k to=500k
.meas ac freq_at2 when v(out)=0.1 fall=LAST
.meas ac bw_chk param='(vout_diff < 100k) ? 1 : 0'
.meas ac vout_rms rms v(out) from=10 to=1G
```

15.5 Batch Output

15.5.1 .SAVE: Name vector(s) to be saved in raw file

General form:

```
.save vector vector vector ...
```

Examples:

```
.save i(vin) input output
.save @m1[id]
.save all @m2[vdsat]
```

The vectors listed on the .SAVE line are recorded in the rawfile for use later with ngspice or ngnutmeg (ngnutmeg is just the data-analysis half of ngspice, without the ability to simulate). The standard vector names are accepted. If no .SAVE line is given, then the default set of vectors are saved (node voltages and voltage source branch currents). If .SAVE lines are given, only those vectors specified are saved. For more discussion on internal device data, e.g. @m1[id], see Appendix, chapt. 30. If you want to save internal data in addition to the default vector set, add the parameter **all** to the vectors to be saved. See also the section on the interactive command interpreter (chapter 17.5) for information on how to use the rawfile.

15.5.2 .PRINT Lines

General form:

```
.print prtype ov1 <ov2 ... ov8>
```

Examples:

```
.print tran v(4) i(vin)
.print dc v(2) i(vsrc) v(23, 17)
.print ac vm(4, 2) vr(7) vp(8, 3)
```

The `.print` line defines the contents of a tabular listing of one to eight output variables. **`prtype`** is the type of the analysis (DC, AC, TRAN, NOISE, or DISTO) for which the specified outputs are desired. The form for voltage or current output variables is the same as given in the previous section for the print command; Spice2 restricts the output variable to the following forms (though this restriction is not enforced by ngspice):

<table>
<tr><td>V(N1<,N2>)</td><td>specifies the voltage difference between nodes N1 and N2. If N2 (and the preceding comma) is omitted, ground (0) is assumed. See the print command in the previous section for more details. For compatibility with spice2, the following five additional values can be accessed for the ac analysis by replacing the "V" in V(N1,N2) with:
<table>
<tr><td>VR</td><td>Real part</td></tr>
<tr><td>VI</td><td>Imaginary part</td></tr>
<tr><td>VM</td><td>Magnitude</td></tr>
<tr><td>VP</td><td>Phase</td></tr>
<tr><td>VDB</td><td>20log10(magnitude)</td></tr>
</table></td></tr>
<tr><td>I(VXXXXXXX)</td><td>specifies the current flowing in the independent voltage source named VXXXXXXX. Positive current flows from the positive node, through the source, to the negative node. (Not yet implemented: For the ac analysis, the corresponding replacements for the letter I may be made in the same way as described for voltage outputs.)</td></tr>
</table>

Output variables for the noise and distortion analyses have a different general form from that of the other analyses. There is no limit on the number of `.print` lines for each type of analysis. The **`par('expression')`** option (15.5.6) allows to use algebraic expressions in the `.print` lines. **.width** (15.5.7) selects the maximum number of characters per line.

15.5.3 .PLOT Lines

General form:

```
.plot pltype ov1 <(plo1, phi1)> <ov2 <(plo2, phi2)> ... ov8>
```

Examples:

```
.plot dc v(4) v(5) v(1)
.plot tran v(17, 5) (2, 5) i(vin) v(17) (1, 9)
.plot ac vm(5) vm(31, 24) vdb(5) vp(5)
.plot disto hd2 hd3(R) sim2
.plot tran v(5, 3) v(4) (0, 5) v(7) (0, 10)
```

The `.plot` line defines the contents of one plot of from one to eight output variables. **`pltype`** is the type of analysis (DC, AC, TRAN, NOISE, or DISTO) for which the specified outputs are desired. The syntax for the **`ovi`** is identical to that for the `.print` line and for the plot command in the interactive mode.

The overlap of two or more traces on any plot is indicated by the letter "X". When more than one output variable appears on the same plot, the first variable specified is printed as well as plotted. If a printout of all variables is desired, then a companion `.print` line should be included. There is no limit on the number of `.plot` lines specified for each type of analysis. The **`par('expression')`** option (15.5.6) allows to use algebraic expressions in the `.plot` lines.

15.5.4 .FOUR: Fourier Analysis of Transient Analysis Output

General form:

```
.four freq ov1 <ov2 ov3 ...>
```

Examples:

```
.four 100K v(5)
```

The `.four` (or Fourier) line controls whether ngspice performs a Fourier analysis as a part of the transient analysis. **`freq`** is the fundamental frequency, and **`ov1`** is the desired vector to be analyzed. The Fourier analysis is performed over the interval <TSTOP-period, TSTOP>, where TSTOP is the final time specified for the transient analysis, and period is one period of the fundamental frequency. The dc component and the first nine harmonics are determined. For maximum accuracy, TMAX (see the `.tran` line) should be set to period/100.0 (or less for very high-Q circuits). The **`par('expression')`** option (15.5.6) allows to use algebraic expressions in the `.four` lines.

15.5.5 .PROBE: Name vector(s) to be saved in raw file

General form:

```
.probe vector <vector vector ...>
```

Examples:

```
.probe i(vin) input output
.probe @ml[id]
```

Same as .SAVE (see chapt. 15.5.1).

15.5.6 par('expression'): Algebraic expressions for output

General form:

```
par('expression')
output=par('expression')  $ not in .measure
```

Examples:

```
.four 1001 sq1=par('v(1)*v(1)')
.measure tran vtest find par('(v(2)*v(1))') AT=2.3m
.print tran output=par('v(1)/v(2)') v(1) v(2)
.plot dc v(1) diff=par('(v(4)-v(2))/0.01') out222
```

In the output lines `.four`, `.plot`, `.print`, `.save` and in the `.measure` evaluation it is possible to add algebraic expression for output, in addition to vectors. All of these output lines accept **`par('expression')`**, where expression is any expression as has already been defined for the B source (see chapter 5.1). Thus **`expression`** may contain predefined functions, numerical values, constants, simulator output like v(n1) or i(vdb), parameters predefined by a .param statement, and the variables hertz, temper, and time.

Internally expression is replaced by an internally generated voltage node, which is the output of a B source, one node and B source per par('...'). Several par('...') are allowed in each line, up to 99 per input file. The internal nodes are named pa_00 to pa_99. If your input file already contains such node names, an error will occur, unless you rename these nodes.

In `.four`, `.plot`, `.print`, `.save`, but not in `.measure`, an alternative syntax **`output=par('expression')`** is possible. **`par('expression')`** may be used as described above. **`output`** is the name of the new node to replace the expression. So **`output`** has to be unique and a valid node name.

The syntax of **`output=par('expression')`** is strict, no spaces between par and ('), or between (and ' are allowed, (' and ') both are required. Also there is not much error checking on your input, if there is a typo, for example, an error may pop up at an unexpected place.

15.5.7 .width

Set the width of a print-out or plot with the following card:

```
.with out = 256
```

Parameter **out** yields the maximum number of characters plotted in a row, if printing in columns or an ASCII-plot is selected.

Chapter 16

Starting ngspice

16.1 Introduction

Ngspice consists of the simulator and a front-end for data analysis and plotting. Input to the simulator is a netlist file, including commands for circuit analysis and output control. Interactive ngspice can plot data from a simulation on a PC or a workstation display.

Ngspice on LINUX (and OSs like Cygwin, BCD, Solaris ...) uses the X Window System for plotting (see chapter 18.3) if the environment variable DISPLAY is available. Otherwise, a console mode (non-graphical) interface is used. If you are using X on a workstation, the DISPLAY variable should already be set; if you want to display graphics on a system different from the one you are running ngspice or ngutmeg on, DISPLAY should be of the form "machine:0.0". See the appropriate documentation on the X Window System for more details.

The MS Windows versions of ngspice and ngnutmeg will have a native graphics interface (see chapter 18.1).

The front-end may be run as a separate "stand-alone" program under the name ngnutmeg. ngnutmeg is a subset of ngspice dedicated to data evaluation, still made available for historical reasons. Ngnutmeg will read in the "raw" data output file created by ngspice -r or by the write command during an interactive ngspice session.

16.2 Where to obtain ngspice

The actual distribution of ngspice may be downloaded from the ngspice download web page. The installation for LINUX or MS Windows is described in the file **INSTALL** to be found in the top level directory.

If you want to check out the source code which is actually under development, you may have a look at the ngspice source code repository, which is stored using the concurrent version system (CVS). The CVS repository may be browsed on the CVS web page, also useful for downloading individual files. You may however download (or check out) the complete source code tree from the console window (LINUX, CYGWIN or MSYS/MINGW) by issuing the command (in a single line)

```
cvs -z3 -d:pserver:anonymous@ngspice.cvs.sourceforge.net:/cvsroot/ngspice
-lf co -P ngspice/ng-spice-rework
```

You need to have CVS installed, which is available for all three OSs. The whole source tree is then available in <current directory>/ngspice/ng-spice-rework. Compilation and local installation is again described in **INSTALL**. If you later want to update your files and download the recent changes from the repository, cd into the ng-spice-rework directory and just type

```
cvs -z3 -d:pserver:anonymous@ngspice.cvs.sourceforge.net:/cvsroot/ngspice
-lf update -d -P
```

16.3 Command line options for starting ngspice and ngnutmeg

Command Synopsis:

```
ngspice [ -o logfile ] [ -r rawfile] [ -b ] [ -i ] [ input file ... ]
ngnutmeg [ - ] [ datafile ... ]
```

Options are:

Option	Long option	Meaning
-		Don't try to load the default data file ("rawspice.raw") if no other files are given (ngnutmeg only).
-n	–no-spiceinit	Don't try to source the file ".spiceinit" upon start-up. Normally ngspice and ngnutmeg try to find the file in the current directory, and if it is not found then in the user's home directory (obsolete).
-t TERM	–terminal=TERM	The program is being run on a terminal with mfb name term (obsolete).
-b	–batch	Run in batch mode. Ngspice reads the default input source (e.g. keyboard) or reads the given input file and performs the analyses specified; output is either Spice2-like line-printer plots ("ascii plots") or a ngspice rawfile. See the following section for details. Note that if the input source is not a terminal (e.g. using the IO redirection notation of "<") ngspice defaults to batch mode (-i overrides). This option is valid for ngspice only.
-s	–server	Run in server mode. This is like batch mode, except that a temporary rawfile is used and then written to the standard output, preceded by a line with a single "@", after the simulation is done. This mode is used by the ngspice daemon. This option is valid for ngspice only. Example for using pipes from the console window: `cat adder.cir|ngspice -s|more`
-i	–interactive	Run in interactive mode. This is useful if the standard input is not a terminal but interactive mode is desired. Command completion is not available unless the standard input is a terminal, however. This option is valid for ngspice only.
-r FILE	–rawfile=FILE	Use rawfile as the default file into which the results of the simulation are saved. This option is valid for ngspice only.
-p	–pipe	Allow a program (e.g., xcircuit) to act as a GUI frontend for ngspice through a pipe. Thus ngspice will assume that the input pipe is a tty and allows to run in interactive mode.
-o FILE	–output=FILE	All logs generated during a batch run (-b) will be saved in outfile.
-h	–help	A short help statement of the command line syntax.
-v	–version	Prints a version information.

-a	–autorun	Start simulation immediately, as if a control section
		`.control`
		`run`
		`.endc`
		had been added to the input file.

Further arguments to ngspice are taken to be ngspice input files, which are read and saved (if running in batch mode then they are run immediately). Ngspice accepts Spice3 (and also most Spice2) input files, and outputs ASCII plots, Fourier analyses, and node printouts as specified in `.plot`, `.four`, and `.print` cards. If an out parameter is given on a `.width` card (15.5.7), the effect is the same as set width = ... Since ngspice ASCII plots do not use multiple ranges, however, if vectors together on a `.plot` card have different ranges they do not provide as much

information as they do in a scalable graphics plot.

For ngnutmeg, further arguments are taken to be data files in binary or ASCII raw file format (generated with -r in batch mode or the **write** (see 17.5.80) command) which are loaded into ngnutmeg. If the file is in binary format, it may be only partially completed (useful for examining output before the simulation is finished). One file may contain any number of data sets from different analyses.

16.4 Starting options

16.4.1 Batch mode

Let's take as an example the Four-Bit binary adder MOS circuit shown in chapter 20.6, stored in a file **adder-mos.cir**. You may start the simulation immediately by calling

```
ngspice -b -r adder.raw -o adder.log adder-mos.cir
```

ngspice will start, simulate according to the .tran command and store the output data in a rawfile adder.raw. Comments, warnings and infos go to log file adder.log.

16.4.2 Interactive mode

If you call

```
ngspice adder-mos.cir
```

ngspice will start, load the circuit file, parse the circuit and then wait for your input. You may then start the simulation by issuing the `run` command, and following completion you may analyze the data by any of the commands given in chapter 17.5.

16.4.3 Interactive mode with control file or control section

If you add the following control section to your input file adder-mos.cir, you may call

```
ngspice adder-mos.cir
```

and see ngspice starting, simulating and then plotting immediately.

Control section:

```
* ADDER - 4 BIT ALL-NAND-GATE BINARY ADDER
.control
set noaskquit
save vcc#branch
run
plot vcc#branch
rusage all
.endc
```

Any suitable command listed in chapter 17.5 may be added to the control section, as well as control structures described in chapter 17.6. Batch-like behavior may be obtained by changing the control section to

Control section with batch-like behavior:

```
* ADDER - 4 BIT ALL-NAND-GATE BINARY ADDER
.control
set noaskquit
save vcc#branch
run
write adder.raw vcc#branch
quit
.endc
```

If you put this control section into a file, say adder-start.sp, you may just add the line

```
.include adder-start.sp
```

to your input file adder-mos.cir to obtain the batch-like behavior. In the following example the line `.tran ...` from the input file is overridden by the **tran** command given in the control section.

Control section overriding the .tran command:

```
* ADDER - 4 BIT ALL-NAND-GATE BINARY ADDER
.control
set noaskquit
save vcc#branch
tran 1n 500n
plot vcc#branch
rusage all
.endc
```

16.5 Standard configuration file spinit

Upon start up ngspice reads its configuration file `spinit`. `spinit` may be found in C:\Spice\share\ngspice\scripts (Windows) or /usr/local/share/ngspice/scripts (LINUX). The path may be overridden by setting the environmental variable SPICE_LIB_DIR to a path where /scripts will be added. ngspice for Windows will also search for `spinit` in the directory where ngspice.exe resides. If `spinit` is not found, a warning message is issued, but ngspice will continue (but of course without code models etc.).

Standard spinit contents:

```
* Standard ngspice init file
alias exit quit
alias acct rusage all
set x11linearcs
*set rndseed=12
*set filetype=ascii
*set ngdebug

*unset brief

strcmp __flag $program "ngspice"
if $__flag = 0

* For SPICE2 POLYs, edit the below line to point to the location
* of your codemodel.
 codemodel C:/Spice/lib/spice/spice2poly.cm

* The other codemodels
 codemodel C:/Spice/lib/spice/analog.cm
 codemodel C:/Spice/lib/spice/digital.cm
 codemodel C:/Spice/lib/spice/xtradev.cm
 codemodel C:/Spice/lib/spice/xtraevt.cm

end
unset __flag
```

spinit contains a script which is run upon start up of ngspice. You may find details of scripting in the next chapter. Aliases (name equivalences) are set. `set filetype=ascii` will yield ASCII output in the output data file (rawfile), a more compact binary format is used otherwise. The asterisk '*' will comment out this line. If used by ngspice, spinit will then load the XSPICE code models from their absolute paths. You may also define relative paths here. `set ngdebug` will yield a lot of additional debug output. Any other contents of the script. e.g. plotting preferences, may be included here and started automatically by ngspice. The compatibility mode of ngspice has to be set in spinit by `set ngbehavior=all`.

If the standard path for the libraries (see standard spinit above or `/usr/local/lib/spice` under CYGWIN and LINUX) is not adequate, you may add for example the ./configure options `--prefix=/usr --libdir=/usr/lib64` to set the codemodel search path to `/usr/lib64/spice`. Besides the standard `lib` only `lib64` is acknowledged.

16.6 User defined configuration file .spiceinit

In addition to **`spinit`** you may define a file **`.spiceinit`** and put it into the current directory or in your home directory. This file will be read in and executed after **`spinit`**, but before any other input file is read. It may contain any script and override the commands given in **`spinit`**. If the command line option `-n` is used upon ngspice start up, this file will be ignored.

16.7 Environmental variables

16.7.1 Ngspice specific variables

SPICE_LIB_DIR default: /usr/local/share/ngspice (LINUX, CYGWIN), C:\Spice\share\ngspice (Windows)

SPICE_EXEC_DIR default: /usr/local/bin (LINUX, CYGWIN), C:\Spice\bin (Windows)

SPICE_BUGADDR default: http://ngspice.sourceforge.net/bugrep.html
Where to send bug reports on ngspice.

SPICE_EDITOR default: vi (LINUX, CYGWIN), notepad.exe (MINGW, Visual Studio)
Set the editor called in the **edit** command. Always overrides the EDITOR env. variable.

SPICE_ASCIIRAWFILE default: 0
Format of the rawfile. 0 for binary, and 1 for ascii.

SPICE_NEWS default: $SPICE_LIB_DIR/news
A file which is copied verbatim to stdout when ngspice starts in interactive mode.

SPICE_HELP_DIR default: $SPICE_LIB_DIR/helpdir
Help directory, not used in Windows mode

SPICE_HOST default: empty string
Used in the **rspice** command (probably obsolete, to be documented)

SPICE_SCRIPTS default: $SPICE_LIB_DIR/scripts
In this directory the spinit file will be searched.

SPICE_PATH default: $SPICE_EXEC_DIR/ngspice
Used in the **aspice** command (probably obsolete, to be documented)

NGSPICE_MEAS_PRECISION default: 5
Sets the number of digits if output values are printed by the **meas(ure)** command.

SPICE_NO_DATASEG_CHECK default: undefined
If defined, will suppress memory resource info (probably obsolete, not used on Windows or where the /proc information system is available.)

NGSPICE_INPUT_DIR default: undefined
If defined, using a valid directory name,, will add the given directory to the search path when looking for input files (*.cir, *.inc, *.lib).

16.7.2 Common environment variables

TERM LINES COLS DISPLAY HOME PATH EDITOR SHELL POSIXLY_CORRECT

16.8 Memory usage

Ngspice started with batch option (-b) and rawfile output (-r rawfile) will store all simulation data immediately into the rawfile without keeping them in memory. Thus very large circuits may be simulated, the memory requested upon ngspice start up will depend on the circuit size, but will not increase during simulation.

If you start ngspice in interactive mode or interactively with control section, all data will be kept in memory, to be available for later evaluation. A large circuit may outgrow even Gigabytes of memory. The same may happen after a very long simulation run with many vectors and many time steps to be stored. Issuing the `save <nodes>` command will help to reduce memory requirements by saving only the data defined by the command.

16.9 Simulation time

Simulating large circuits may take an considerable amount of CPU time. If this is of importance, you should compile ngspice with the flags for optimum speed, set during configuring ngspice compilation. Under LINUX, MINGW, and CYGWIN you should select the following option to disable the debug mode, which slows down ngspice:

```
./configure --disable-debug
```

Adding `--disable-debug` will set the -O2 optimization flag for compiling and linking.

Under MS Visual Studio, you will have to select the **release** version which includes optimization for speed.

If you have selected XSPICE (see chapters 12 and II) as part of your compilation configuration (by adding the option `--enable-xspice` to your `./configure` command), the value of **trtol** (see 15.1.3) is set internally to 1 (instead of default 7) for higher precision if XSPICE code model 'A' devices included in the circuit. This may double or even triple the CPU time needed for any transient simulation, because the amount of time steps and thus iteration steps is more than doubled. For MS Visual Studio compilation there is currently no simple way to exclude XSPICE during compilation.

You may enforce higher speed setting the **option** `trtol=7` in your **.spiceinit** initialization file (via the option command 17.5.39) or in your circuit input file (via an .options line 15.1) to obtain standard spice3 tolerances and a speed gain of two. Beware however of convergence or precision issues if you use XSPICE 'A' devices.

If your circuit comprises mostly of MOS transistors, and you have a multi-core processor at hand, you may benefit from OpenMP parallel processing, as described next (16.10).

16.10 Ngspice on multi-core processors using OpenMP

16.10.1 Introduction

Today's computers typically come with CPUs having more than one core. It will thus be useful to enhance ngspice to make use of such multi-core processors.

Using circuits comprising mostly of transistors and e.g. the BSIM3 model, around 2/3 of the CPU time is spent in evaluating the model equations (e.g. in the BSIM3Load() function). The same happens with other advanced transistor models. Thus this function should be paralleled, if possible. Resulting from that the parallel processing has to be within a dedicated device model. Interestingly solving the matrix takes only about 10% of the CPU time, so paralleling the matrix solver is of secondary interest here!

A recent publication [1] has described a way to exactly do that using OpenMP, which is available on many platforms and is easy to use, especially if you want to parallel processing of a for-loop.

I have chosen the BSIM3 version 3.3.0 model, located in the BSIM3 directory, as the first example. The BSIM3load() function in b3ld.c contains two nested for-loops using linked lists (models and instances, e.g. individual transistors). Unfortunately OpenMP requires a loop with an integer index. So in file B3set.c an array is defined, filled with pointers to all instances of BSIM3 and stored in model->BSIM3InstanceArray.

BSIM3load() is now a wrapper function, calling the for-loop, which runs through functions BSIM3LoadOMP(), once per instance. Inside BSIM3LoadOMP() the model equations are calculated.

Typically you now need to synchronize the activities, in that storing the results into the matrix has to be guarded. The trick offered by the authors now is that the storage is moved out of the BSIM3LoadOMP() function. Inside BSIM3LoadOMP() the updated data are stored in extra locations locally per instance, defined in bsim3def.h. Only after the complete for-loop is exercised, the update to the matrix is done in an extra function BSIM3LoadRhsMat() in the main thread after the paralleled loop. No extra synchronization is required.

Then the thread programming needed is only a single line!!

```
#pragma omp parallel for num_threads(nthreads) private(here)
```

introducing the for-loop.

This of course is made possible only thanks to the OpenMP guys and the clever trick on no synchronization introduced by the above cited authors.

The time-measuring function `getrusage()` used with LINUX or Cygwin to determine the CPU time usage (with the `rusage` option enabled) counts tics from every core, adds them up, and thus reports a CPU time value enlarged by a factor of 8 if 8 threads have been chosen. So now ngspice is forced to use `ftime` for time measuring if OpenMP is selected.

16.10.2 Some results

Some results on an inverter chain with 627 CMOS inverters, running for 200ns, compiled with Visual Studio professional 2008 on Windows 7 (full optimization) or gcc 4.4, SUSE LINUX 11.2, -O2, on a i7 860 machine with four real cores (and 4 virtuals using hyperthreading) are shown in table 16.1.

So we see a ngspice speed up of nearly a factor of two! Even on an older notebook with dual core processor, I have got more than 1.5x improvement using two threads. Similar results are to be expected from BSIM4.

Table 16.1: OpenMP performance

Threads	CPU time [s]	CPU time [s]
	Windows	LINUX
1 (standard)	167	165
1 (OpenMP)	174	167
2	110	110
3	95	94-120
4	83	107
6	94	90
8	93	91

16.10.3 Usage

To state it clearly: OpenMP is installed inside the model equations of a particular model. So for the moment it is available only in **BSIM3 version 3.3.0**, not in version 3.2.4 nor in any other BSIM3 model, in **BSIM4 versions 4.6.5** or **4.7**, not in any other BSIM4 model, and in B4SOI, version 4.3.1, not in any other SOI model. Older parameter files of version 4.6.x (x any number up to 5) are accepted, you have to check for compatibility.

Under **LINUX** you may run

```
./autogen.sh
./configure ...  --enable-openmp
make install
```

The same has been tested under MS Windows with **CYGWIN** and **MINGW** as well and delivers similar results.

Under **MS Windows** with **Visual Studio Professional** you have to place an additional preprocessor flag **USE_OMP**, and then enable **/openmp**. Visual Studio Express is not sufficient due to lack of OpenMP support. Even Visual Studio Professional lacks debugging support for OpenMP. There are local preprocessor flags (USE_OMP3 in bsim3def.h, USE_OMP4 in bsim4def.h, and USE_OMP4SOI in b4soidef.h) which you may modify individually if you want to switch off OpenMP in only one of the models BSIM3, BSIM4, or B4SOI.

The number of threads has to be set manually by placing

```
set num_threads=4
```

into spinit or .spiceinit. If OpenMP is enabled, but num_threads not set, a default value `num_threads=2` is set internally.

If you run a circuit, please keep in mind to select BSIM3 (levels 8, 49) version 3.3.0 (11.2.9), by placing this version number into your parameter files, BSIM4 (levels 14, 54) version 4.6.5 or 4.7 (11.2.10), or B4SOI (levels 10, 58) version 4.3.1 (11.2.12).

If you run ./configure without `--enable-openmp` (or without USE_OMP preprocessor flag under MS Windows), you will get the standard, not paralleled BSIM3 and BSIM4 model, as has been available from Berkeley. If OpenMP is selected and the number of threads set to 1, there will be only a very slight CPU time disadvantage (typ. 3%) compared to the standard, non OpenMP build.

16.10.4 Literature

[1] R.K. Perng, T.-H. Weng, and K.-C. Li: "On Performance Enhancement of Circuit Simulation Using Multithreaded Techniques", IEEE International Conference on Computational Science and Engineering, 2009, pp. 158-165

16.11 Server mode option -s

A program may write the spice input to the console. This output is redirected to ngspice via '|'. ngspice called with the -s option writes its output to the console, which again is redirected to a receiving program by '|'. In the following simple example **cat** reads the input file and prints it content to the console, which is redirected to ngspice by a first pipe, ngspice transfers its output (similar to a raw file, see below) to **less** via another pipe.

Example command line:

```
cat input.cir|ngspice -s|less
```

Under MS Windows you will need to compile ngspice as a console application (see chapt. 31.2.7) for this server mode usage.

Example input file:

```
test -s
v1 1 0 1
r1 1 0 2k
.options filetype=ascii
.save i(v1)
.dc v1 -1 1 0.5
.end
```

If you start ngspice console with

```
ngspice -s
```

you may type in the above circuit line by line (not to forget the first line, which is a title and will be ignored). If you close your input with `ctrl Z`, and `return`, you will get the following output (this is valid for MINGW only) on the console, like a raw file:

```
Circuit: test -s

Doing analysis at TEMP = 27.000000 and TNOM = 27.000000

Title: test -s
Date: Sun Jan 15 18:57:13 2012
Plotname: DC transfer characteristic
Flags: real
No. Variables: 2
No. Points: 0
```

```
Variables:
No. of Data Columns : 2
0 v(v-sweep) voltage
1 i(v1) current
Values:
0   -1.000000000000000e+000
   5.000000000000000e-004
1   -5.000000000000000e-001
   2.500000000000000e-004
2    0.000000000000000e+000
   0.000000000000000e+000
3    5.000000000000000e-001
  -2.500000000000000e-004
4    1.000000000000000e+000
  -5.000000000000000e-004
@@@ 122 5
```

The number 5 of the last line `@@@ 122 5` shows the number of data points, which is missing in the above line `No. Points: 0` because at the time of writing to the console it has not yet been available.

`ctrl Z` is not usable here in LINUX, a patch to install `ctrl D` instead is being evaluated.

16.12 Ngspice control via input, output fifos

The following bash script (under LINUX)

- launches ngspice in another thread.

- writes some commands in ngspice input

- reads the output and prints them on the console.

Example:

```
#!/usr/bin/env bash

NGSPICE_COMMAND="ngspice"

rm input.fifo
rm output.fifo

mkfifo input.fifo
mkfifo output.fifo

$NGSPICE_COMMAND -p -i <input.fifo >output.fifo &

exec 3>input.fifo
echo "I can write to input.fifo"

echo "Start processing..."
echo ""

echo "source circuit.cir" >&3
echo "set noaskquit" >&3
echo "set nobreak" >&3
echo "tran 0.01ms 0.1ms">&3
echo "print n0" >&3
echo "quit" >&3

echo "Try to open output.fifo ..."
exec 4<output.fifo
echo "I can read from output.fifo"

echo "Ready to read..."
while read output
do
      echo $output
done <&4

exec 3>&-
exec 4>&-

echo "End processing"
```

The input file for **spice** is:

Circuit.cir:

```
* Circuit.cir
V1 n0 0 SIN(0 10 1kHz)
C1 n1 n0 3.3nF
R1 0 n1 1k
.end
```

16.13 Compatibility

ngspice is a direct derivative of spice3f5 from UC Berkeley and thus inherits all of the commands available in its predecessor. Thanks to the open source policy of UCB (original spice3 from 1994 is still available here), several commercial variants have sprung off, either being more dedicated to IC design or more concentrating on simulating discrete and board level electronics. None of the commercial and almost none of the freely downloadable spice providers publishes the source code. All of them have proceeded with the development, by adding functionality, or by adding a more dedicated user interface. Some have kept the original spice syntax for their netlist description, others have quickly changed some if not many of the commands, functions and procedures. Thus it is difficult, if not impossible, to offer a simulator which aknowledges all of these netlist dialects. ngspice includes some features which enhance compatibility which are included automatically. This selection may be controlled to some extend by setting the compitibility mode. Others may be invoked by the user by small additions to the netlist input file. Some of them are listed in this chapter, some will be integrated into ngspice at a later stage, others will be added if they are reported by users.

16.13.1 Compatibility mode

The variable (17.7) ngbehavior sets the compatibility mode. `'all'` is set as the default value. `'spice3'` as invoked by the command

```
set ngbehavior=spice3
```

in **`spinit`** or **`.spiceinit`** will disable some of the advanced ngspice features. `'ps'` will enable including a library by a simple `.lib <lib_filename>` statement which is not compatible to the more comfortable library handling described in chapt. 2.7.

16.13.2 Missing functions

You may add one or more function definitions to your input file, as listed below.

```
.func LIMIT(x,a,b) {min(max(x, a), b)}
.func PWR(x,a) {abs(x) ** a}
.func PWRS(x,a) {sgn(x) * PWR(x,a)}
.func stp(x) {u(x)}
```

16.13.3 Devices

16.13.3.1 E Source with LAPLACE

see chapt. 5.2.5.

16.13.3.2 VSwitch

The VSwitch

```
S1 2 3 11 0 SW
.MODEL SW VSWITCH(VON=5V VOFF=0V RON=0.1 ROFF=100K)
```

may become

```
a1 11 (2 3) sw
.MODEL SW aswitch(cntl_off=0.0 cntl_on=5.0 r_off=1e5
+ r_on=0.1 log=TRUE)
```

The XSPICE option has to be enabled.

16.13.4 Controls and commands

16.13.4.1 .lib

The ngspice .lib command (see 2.7) requires two parameters, a file name followed by a library name. If no library name is given, the line

```
.lib filename
```

should be replaced by

```
.inc filename
```

Alternatively, the compatibility mode (16.13.1) may be set to `'ps'`.

16.13.4.2 .step

Repeated analysis in ngspice if offered by a short script inside of a .control section (see chapt. 17.8.7) added to the input file. A simple application (multiple dc sweeps) is shown below.

Input file with parameter sweep

```
parameter sweep
* resistive divider, R1 swept from start_r to stop_r
* replaces .STEP R1 1k 10k 1k

R1 1 2 1k
R2 2 0 1k

VDD 1 0 DC 1
.dc VDD 0 1 .1

.control
let start_r = 1k
let stop_r = 10k
let delta_r = 1k
let r_act = start_r
* loop
while r_act le stop_r
  alter r1 r_act
  run
  write dc-sweep.out v(2)
  set appendwrite
  let r_act = r_act + delta_r
end
plot dc1.v(2) dc2.v(2) dc3.v(2) dc4.v(2) dc5.v(2)
+ dc6.v(2) dc7.v(2) dc8.v(2) dc9.v(2) dc10.v(2)
.endc

.end
```

16.14 Reporting bugs and errors

Ngspice is a complex piece of software. The source code contains over 1500 files. Various models and simulation procedures are provided, some of them not used and tested intensively. Therefore errors may be found, some still evolving from the original spice3f5 code, others introduced during the ongoing code enhancements.

If you happen to experience an error during the usage of ngspice, please send a report to the development team. Ngspice is hosted on sourceforge, the preferred place to post a bug report is the ngspice bug tracker. We would prefer to have your bug tested against the actual source code available at CVS, but of course a report using the most recent ngspice release is welcome! Please provide the following information with your report:

Ngspice version

Operating system

Small input file to reproduce the bug

Actual output versus the expected output

Chapter 17

Interactive Interpreter

17.1 Introduction

The simulation flow in ngspice (input, simulation, output) may be controlled by dot commands (see chapt. 15 and 16.4.1) in batch mode. There is, however, a much more powerful control scheme available in ngspice, traditionally coined "Interactive Interpreter", but being much more than just that. In fact there are several ways to use this feature, truely interactively by typing commands to the input, but also running command sequences as scripts or as part of your input deck in a quasi batch mode.

You may type in expressions, functions (17.2) or commands (17.5) into the input console to elaborate on data already achieved from the interactive simulation session.

Sequences of commands, functions and control structures (17.6) may be assembled as a script (17.8) into a file, and then activated by just typing the file name into the console input of an interactive ngspice session.

Finally, and most useful, is it to add a script to the input file, in addition the the netlist and dot commands. This is achieved by enclosing the script into `.control ... .endc` (see 16.4.3, and 17.8.7 for an example). This feature enables a wealth of control options. You may set internal (17.7) and other variables, start a simulation, evaluate the simulation output, start a new simulation based on these data, and finally make use of many options for outputting the data (graphically or into output files).

17.2 Expressions, Functions, and Constants

Ngspice and ngnutmeg store data in the form of vectors: time, voltage, etc. Each vector has a type, and vectors can be operated on and combined algebraically in ways consistent with their types. Vectors are normally created as the output of a simulation, or when a data file (output raw file) is read in again (ngspice, ngnutmeg, see the load command 17.5.35), or when the initial data-file is loaded directly into ngnutmeg. They can also be created with the let command 817.5.32).

An expression is an algebraic formula involving vectors and scalars (a scalar is a vector of length 1) and the following operations:

`+ - * / ^ % ,`

% is the modulo operator, and the comma operator has two meanings: if it is present in the argument list of a user definable function, it serves to separate the arguments. Otherwise, the term `x , y` is synonymous with `x + j(y)`. Also available are the logical operations & (and), | (or), ! (not), and the relational operations <, >, >=, <=, =, and <> (not equal). If used in an algebraic expression they work like they would in C, producing values of 0 or 1. The relational operators have the following synonyms:

Operator	Synonym
gt	>
lt	<
ge	>=
le	<=
ne	<>
and	&
or	|
not	!
eq	=

The operators are useful when < and > might be confused with IO redirection (which is almost always). It is however safe to use < and > with the **`define`** command (17.5.13).

The following functions are available:

Name	Function
mag(vector)	Magnitude of vector (same as abs(vector)).
ph(vector)	Phase of vector.
cph(vector)	Phase of vector. Continuous values, no discontinuity at ±PI.
j(vector)	i(sqrt(-1)) times vector.
real(vector	The real component of vector.
imag(vector)	The imaginary part of vector.
db(vector)	20 log10(mag(vector)).
log(vector)	The logarithm (base 10) of vector.
ln(vector)	The natural logarithm (base e) of vector.
exp(vector)	e to the vector power.
abs(vector)	The absolute value of vector (same as mag).
sqrt(vector)	The square root of vector.
sin(vector)	The sine of vector.
cos(vector)	The cosine of vector.
tan(vector)	The tangent of vector.
atan(vector)	The inverse tangent of vector.
sinh(vector)	The hyperbolic sine of vector.
cosh(vector)	The hyperbolic cosine of vector.
tanh(vector)	The hyperbolic tangent of vector.
floor(vector)	Largest integer that is less than or equal to vector.
ceil(vector)	Smallest integer that is greater than or equal to vector.
norm(vector)	The vector normalized to 1 (i.e, the largest magnitude of any component is 1).
mean(vector)	The result is a scalar (a length 1 vector) that is the mean of the elements of vector (elements values added, divided by number of elements).
avg(vector)	The average of a vector. Returns a vector where each element is the mean of the preceding elements of the input vector (including the actual element).
group_delay(vector)	Calculates the group delay -dphase[rad]/dω[rad/s]. Input is the complex vector of a system transfer function versus frequency, resembling damping and phase per frequency value. Output is a vector of group delay values (real values of delay times) versus frequency.
vector(number)	The result is a vector of length number, with elements 0, 1, ... number - 1. If number is a vector then just the first element is taken, and if it isn't an integer then the floor of the magnitude is used.
unitvec(number)	The result is a vector of length number, all elements having a value 1.
length(vector)	The length of vector.

Name	Function
interpolate(plot.vector)	The result of interpolating the named vector onto the scale of the current plot. This function uses the variable polydegree to determine the degree of interpolation.
deriv(vector)	Calculates the derivative of the given vector. This uses numeric differentiation by interpolating a polynomial and may not produce satisfactory results (particularly with iterated differentiation). The implementation only calculates the derivative with respect to the real component of that vector's scale.
vecd(vector)	Compute the differential of a vector.
vecmin(vector)	Returns the value of the vector element with minimum value.
vecmax(vector)	Returns the value of the vector element with maximum value.

Several functions offering statistical procedures are listed in the following table:

Name	Function
rnd(vector)	A vector with each component a random integer between 0 and the absolute value of the input vector's corresponding integer element value.
sgauss(vector)	Returns a vector of random numbers drawn from a Gaussian distribution (real value, mean = 0 , standard deviation = 1). The length of the vector returned is determined by the input vector. The contents of the input vector will not be used. A call to sgauss(0) will return a single value of a random number as a vector of length 1..
sunif(vector)	Returns a vector of random real numbers uniformly distributed in the interval [-1 .. 1[. The length of the vector returned is determined by the input vector. The contents of the input vector will not be used. A call to sunif(0) will return a single value of a random number as a vector of length 1.
poisson(vector)	Returns a vector with its elements being integers drawn from a Poisson distribution. The elements of the input vector (real numbers) are the expected numbers λ. Complex vectors are allowed, real and imaginary values are treated separately.
exponential(vector)	Returns a vector with its elements (real numbers) drawn from an exponential distribution. The elements of the input vector are the respective mean values (real numbers). Complex vectors are allowed, real and imaginary values are treated separately.

An input vector may be either the name of a vector already defined or a floating-point number (a scalar). A scalar will result in an output vector of length 1. A number may be written in any format acceptable to ngspice, such as 14.6Meg or -1.231e-4. Note that you can either use scientific notation or one of the abbreviations like MEG or G, but not both. As with ngspice, a number may have trailing alphabetic characters.

The notation expr [num] denotes the num'th element of expr. For multi-dimensional vectors, a vector of one less dimension is returned. Also for multi-dimensional vectors, the notation expr[m][n] will return the nth element of the mth subvector. To get a subrange of a vector, use the form expr[lower, upper]. To reference vectors in a plot that is not the current plot (see the setplot command, below), the notation plotname.vecname can be used. Either a plotname or a vector name may be the wildcard all. If the plotname is all, matching vectors from all plots are specified, and if the vector name is all, all vectors in the specified plots are referenced. Note that you may not use binary operations on expressions involving wildcards - it is not obvious what all + all should denote, for instance. Thus some (contrived) examples of expressions are:

Expressions example:

```
cos(TIME) + db(v(3))
sin(cos(log([1 2 3 4 5 6 7 8 9 10])))
TIME * rnd(v(9)) - 15 * cos(vin#branch) ^ [7.9e5 8]
not ((ac3.FREQ[32] & tran1.TIME[10]) gt 3)
(sunif(0) ge 0) ? 1.0 : 2.0
```

Vector names in ngspice may have look like @dname[param], where dname is either the name of a device instance or of a device model. This vector contains the value of the param parameter of the device or model. See Appendix, chapt. 30 for details of which parameters are available. The value is a vector of length 1. This function is also available with the show command, and is available with variables for convenience for command scripts.

There are a number of pre-defined constants in ngspice, which you may use by their name. They are stored in plot (17.3) "const" and are listed in the table below:

Name	Description	Value
pi	π	3.14159...
e	e (the base of natural logarithms)	2.71828...
c	c (the speed of light)	299,792,500 m/sec
i	i (the square root of -1)	$\sqrt{-1}$
kelvin	(absolute zero in centigrade)	-273.15°C
echarge	q (the charge of an electron)	1.60219e-19 C
boltz	k (Boltzmann's constant)	1.38062e-23J/K
planck	h (Planck's constant)	6.62620e-34
yes	boolean	1
no	boolean	0
TRUE	boolean	1
FALSE	boolean	0

These constants are all given in MKS units. If you define another variable with a name that conflicts with one of these then it takes precedence.

Additional constants may be generated during circuit setup (see .csparam, 2.10).

17.3 Plots

The output vectors of any analysis are stored in plots, a traditional SPICE notion. A plot is a group of vectors. A first `tran` command will generate several vectors within a plot tran1. A

subsequent **tran** command will store their vectors in tran2. Then a **linearize** command will linearize all vectors from tran2 and store them in tran3, which then becomes the current plot. A **fft** will generate a plot spec1, again now the current plot. The **display** command always will show all vectors in the current plot. **Setplot** followed by Return will show all plots. **Setplot name** will change the current plot to 'name' (e.g. **setplot tran2** will make tran2 the current plot). A sequence **name.vector** may be used to access the vector from a foreign plot.

You may generate plots by yourself: **setplot new** will generate a new plot named unknown1, **set curplottitle="a new plot"** will set a title, set **curplotname=myplot** will set its name as a short description, set **curplotdate="Sat Aug 28 10:49:42 2010"** will set its date. Note that strings with spaces have to be given with double quotes.

Of course the notion 'plot' will be used by this manual also in its more common meaning, denoting a graphics plot or being a **plot** command. Be careful to get the correct meaning.

17.4 Command Interpretation

On the ngspice console window (or into the Windows GUI) you may directly type in any command from 17.5. IO redirection is available (see chapt. 17.8.8 for an example) - the symbols >, >>, >&, >>&, and < have the same effects as in the C-shell.

You may type multiple commands on one line, separated by semicolons. If a word is typed as a command, and there is no built-in command with that name, the directories in the `sourcepath` list are searched in order for the file. If it is found, it is read in as a command file (as if it were sourced). Before it is read, however, the variables **argc** and **argv** are set to the number of words following the file-name on the command line, and a list of those words respectively. After the file is finished, these variables are unset. Note that if a command file calls another, it must save its **argv** and **argc** since they are altered. Also, command files may not be re-entrant since there are no local variables. (Of course, the procedures may explicitly manipulate a stack...) This way one can write scripts analogous to shell scripts for ngnutmeg and ngspice.

Note that for the script to work with ngspice, it must begin with a blank line (or whatever else, since it is thrown away) and then a line with `.control` on it. This is an unfortunate result of the source command being used for both circuit input and command file execution. Note also that this allows the user to merely type the name of a circuit file as a command and it is automatically run. The commands are executed immediately, without running any analyses that may be specified in the circuit (to execute the analyses before the script executes, include a "run" command in the script).

There are various command scripts installed in `/usr/local/lib/spice/scripts` (or whatever the path is on your machine), and the default `sourcepath` includes this directory, so you can use these command files (almost) like built-in commands.

17.5 Commands

Commands marked with a * are only available in ngspice, not in ngnutmeg.

17.5.1 Ac*: Perform an AC, small-signal frequency response analysis

General Form:

```
ac ( DEC | OCT | LIN ) N Fstart Fstop
```

Do an small signal ac analysis (see also chapter 15.3.1) over the specified frequency range.

`DEC` decade variation, and `N` is the number of points per decade.

`OCT` stands for octave variation, and `N` is the number of points per octave.

`LIN` stands for linear variation, and `N` is the number of points.

`fstart` is the starting frequency, and `fstop` is the final frequency.

Note that in order for this analysis to be meaningful, at least one independent source must have been specified with an ac value.

In this ac analysis all non-linear devices are linearized around their actual dc operating point. All Ls and Cs get their imaginary value, depending on the actual frequency step. Each output vector will be calculated relative to the input voltage (current) given by the ac value (Iin equals to 1 in the example below). The resulting node voltages (and branch currents) are complex vectors. Therefore you have to be careful using the plot command.

Example:

```
* AC test
Iin 1 0 AC 1
R1 1 2 100
L1 2 0 1

.control
AC LIN 101 10 10K
plot v(2)          $ real part !
plot mag(v(2))     $ magnitude
plot db(v(2))      $ same as vdb(2)
plot imag(v(2))
plot real(v(2))
plot phase(v(2))   $ phase in rad
plot 180/PI*phase(v(2)) $ phase in deg
.endc
.end
```

In addition to the plot examples given above you may use the variants of vxx(node) described in chapter 15.5.2 like `vdb(2)`.

17.5.2 Alias: Create an alias for a command

General Form:

```
alias [word] [text ...]
```

Causes word to be aliased to text. History substitutions may be used, as in C-shell aliases.

17.5.3 Alter*: Change a device or model parameter

Alter changes the value for a device or a specified parameter of a device or model.

General Form:

```
alter dev = <expression>
alter dev param = <expression>
alter @dev[param] = <expression>
```

<expression> must be real (complex isn't handled right now, integer is fine though, but no strings. For booleans, use 0/1.

Old style (pre 3f4):

```
alter device value
alter device parameter value [ parameter value ]
```

Using the old style, its first form is used by simple devices which have one principal value (resistors, capacitors, etc.) where the second form is for more complex devices (bjt's, etc.). Model parameters can be changed with the second form if the name contains a "#". For specifying vectors as values, start the vector with "[", followed by the values in the vector, and end with "]". Be sure to place a space between each of the values and before and after the "[" and "]".

Some examples are given below:

Examples (Spice3f4 style):

```
alter vd = 0.1
alter vg dc = 0.6
alter @m1[w]= 15e-06
alter  @vg[sin] [ -1 1.5 2MEG ]
alter @Vi[pwl] = [ 0 1.2 100p 0 ]
```

17.5.4 Altermod*: Change model parameter(s)

General form:

```
altermod mod param = <expression>
altermod @mod[param] = <expression>
```

Example:

```
altermod nc1 tox = 10e-9
altermod @nc1[tox] = 10e-9
```

Altermod operates on models and is used to change model parameters. The above example will change the parameter `tox` in all devices using the model `nc1`, which is defined as

```
*** BSIM3v3 model
.MODEL nc1 nmos LEVEL=8 version = 3.2.2
+ acm = 2 mobmod = 1 capmod = 1 noimod = 1
+ rs = 2.84E+03 rd = 2.84E+03 rsh = 45
+ tox = 20E-9 xj = 0.25E-6 nch = 1.7E+17
+ ...
```

If you invoke the model by the MOS device

```
M1 d g s b nc1 w=10u l=1u
```

you might also insert the device name M1 for `mod` as in

```
altermod M1 tox = 10e-9
```

The model parameter `tox` will be modified, however not only for device M1, but for all devices using the associated MOS model nc1!

If you want to run corner simulations within a single simulation flow, the following option of altermod may be of help. The parameter set with name `modn` may be overrun by the altermod command specifying a model file. All parameter values fitting to the existing model which is defined as `modn` will be modified. As usual the 'reset' command (see 17.5.45) restores the original values. The model file (see 2.3) has to use the standard specifications for an input file, the .model section is the relevant part. However the first line in the model file will be ignored by the input parser, so it should contain only some title information. The `.model` statement should appear then in the second or any later line. More than one .model section may reside in the file.

General form:

```
altermod mod1 [mod2 .. mod15] file = <model file name>
altermod mod1 [mod2 .. mod15] file  <model file name>
```

Example:

```
altermod nch file = BSIM3_nmos.mod
altermod pch nch file BSIM4_mos.mod
```

Be careful that the new model file corresponds to the existing model selected by `modn`. The existing models are defined during circuit setup at start up of ngspice. Models have been included by `.model` statements (2.3) in your input file or included by the `.include` command. In the example given above, the models nch (or nch and pch) have to be already available before calling `altermod`. If they are not found in the active circuit, ngspice will terminate with an error message. There is no checking however of the version and level parameters! So you have to be responsible for offering model data of the same model level (e.g. level 8 for BSIM3). Thus no new model is selectable by `altermod`, but the parameters of the existing model(s) may be changed (partially, completely, temporarily).

17.5.5 Asciiplot: Plot values using old-style character plots

General Form:

```
asciiplot plotargs
```

Produce a line printer plot of the vectors. The plot is sent to the standard output, so you can put it into a file with asciiplot args ... > file. The set options width, height, and nobreak determine the width and height of the plot, and whether there are page breaks, respectively. Note that you will have problems if you try to asciiplot something with an X-scale that isn't monotonic (i.e, something like sin(TIME)), because asciiplot uses a simple-minded linear interpolation. The asciiplot command doesn't deal with log scales or the delta keywords.

17.5.6 Aspice*: Asynchronous ngspice run

General Form:

```
aspice input-file [output-file]
```

Start an ngspice run, and when it is finished load the resulting data. The raw data is kept in a temporary file. If output-file is specified then the diagnostic output is directed into that file, otherwise it is thrown away.

17.5.7 Bug: Mail a bug report

General Form:

```
bug
```

Send a bug report. Please include a short summary of the problem, the version number and name of the operating system that you are running, the version of ngspice that you are running, and the relevant ngspice input file. (If you have defined `BUGADDR`, the mail is delivered to there.)

17.5.8 Cd: Change directory

General Form:

```
cd [directory]
```

Change the current working directory to directory, or to the user's home directory if none is given.

17.5.9 Cdump: Dump the control flow to the screen

General Form:

```
cdump
```

Dumps the control sequence to the screen (all statements inside the .control ... .endc structure before the line with cdump). Indentations show the structure of the sequence. The example below is printed if you add **cdump** to /examples/Monte_Carlo/MonteCarlo.sp.

Example (abbreviated):

```
let mc_runs=5
let run=0
...
define agauss(nom, avar, sig) (nom + avar/sig * sgauss(0))
define limit(nom, avar) (nom + ((sgauss(0) >=0) ? avar : -avar))
dowhile run < mc_runs
  alter c1=unif(1e-09, 0.1)
...
  ac oct 100 250k 10meg
  meas ac bw trig vdb(out) val=-10 rise=1 targ vdb(out) val=-10 fall=1
  set run="$&run"
...
  let run=run + 1
end
plot db({$scratch}.allv)
echo
print {$scratch}.bwh
cdump
```

17.5.10 Codemodel*: Load an XSPICE code model library

General Form:

```
codemodel [library file]
```

Load a XSPICE code model shared library file (e.g. analog.cm ...). Only available if ngspice is compiled with the XSPICE option (–enable-xspice) or with the Windows executable distributed since ngspice21. This command has to be called from spinit (see chapt. 16.5) (or .spiceinit for personal code models, 16.6).

17.5.11 Compose: Compose a vector

General Form:

```
compose name values value1 [ value2 ... ]
compose name parm = val [ parm = val ... ]
```

The first form takes the values and creates a new vector, the values may be arbitrary expressions.

The second form has the following possible parameters:

start The value at which the vector should start.

stop The value at which the vector should end.

step The difference between successive elements.

lin The number of points, linearly spaced..

17.5.12 Dc*: Perform a DC-sweep analysis

General Form:

```
dc Source-Name Vstart Vstop Vincr [ Source2 Vstart2 Vstop2 Vincr2 ]
```

Do a dc transfer curve analysis. See the previous chapter 15.3.2 for more details.

17.5.13 Define: Define a function

General Form:

```
define function(arg1, arg2, ...) expression
```

Define the user-definable function with the name function and arguments arg1, arg2, ... to be expression, which may involve the arguments. When the function is later used, the arguments it is given are substituted for the formal arguments when it is parsed. If expression is not present, any definition for function is printed, and if there are no arguments to define then all currently active definitions are printed. Note that you may have different functions defined with the same name but different arities. Some useful definitions are:

Example:

```
define max(x,y) (x > y) * x + (x <= y) * y
define min(x,y) (x < y) * x + (x >= y) * y
define limit(nom, avar) (nom + ((sgauss(0) >= 0) ? avar : -avar))
```

17.5.14 Deftype: Define a new type for a vector or plot

General Form:

```
deftype [v | p] typename abbrev
```

defines types for vectors and plots. abbrev will be used to parse things like abbrev(name) and to label axes with M<abbrev>, instead of numbers. It may be omitted. Also, the command "deftype p plottype pattern ..." will assign plottype as the name to any plot with one of the patterns in its Name: field.

Example:

```
deftype v capacitance F
settype capacitance moscap
plot moscap vs v(cc)
```

17.5.15 Delete*: Remove a trace or breakpoint

General Form:

```
delete [ debug-number ... ]
```

Delete the specified breakpoints and traces. The debug numbers are those shown by the status command (unless you do status > file, in which case the debug numbers are not printed).

17.5.16 Destroy: Delete an output data set

General Form:

```
destroy [plotnames | all]
```

Release the memory holding the output data (the given plot or all plots) for the specified runs.

17.5.17 Devhelp: information on available devices

General Form:

```
devhelp [[-csv] device_name [parameter]]
```

Devhelp command shows the user information about the devices available in the simulator. If called without arguments, it simply displays the list of available devices in the simulator. The name of the device is the name used inside the simulator to access that device. If the user specifies a device name, then all the parameters of that device (model and instance parameters) will be printed. Parameter description includes the internal ID of the parameter (id#), the name used in the model card or on the instance line (Name), the direction (Dir) and the description of the parameter (Description). All the fields are self-explanatory, except the "direction". Direction can be "in", "out" or "inout" and corresponds to a "write-only", "read-only" or a "read/write" parameter. Read-only parameters can be read but not set, write only can be set but not read and read/write can be both set and read by the user.

The "-csv" option prints the fields separated by a comma, for direct import into a spreadsheet. This option is used to generate the simulator documentation.

Example:

```
devhelp
devhelp resistor
devhelp capacitor ic
```

17.5.18 Diff: Compare vectors

General Form:

```
diff plot1 plot2 [vec ...]
```

Compare all the vectors in the specified plots, or only the named vectors if any are given. If there are different vectors in the two plots, or any values in the vectors differ significantly, the difference is reported. The variables diff_abstol, diff_reltol, and diff_vntol are used to determine a significant difference.

17.5.19 Display: List known vectors and types

General Form:

```
display [varname ...]
```

Prints a summary of currently defined vectors, or of the names specified. The vectors are sorted by name unless the variable nosort is set. The information given is the name of the vector, the length, the type of the vector, and whether it is real or complex data. Additionally, one vector is labeled [scale]. When a command such as plot is given without a vs argument, this scale is used for the X-axis. It is always the first vector in a rawfile, or the first vector defined in a new plot. If you undefine the scale (i.e, let TIME = []), one of the remaining vectors becomes the new scale (which one is unpredictable). You may set the scale to another vector of the plot with the command setscale (17.5.56).

17.5.20 Echo: Print text

General Form:

```
echo [text...] [$variable] ["$&vector"]
```

Echos the given text, variable or vector to the screen. **echo** without parameters issues a blank line.

17.5.21 Edit*: Edit the current circuit

General Form:

```
edit [ file ]
```

Print the current ngspice input file into a file, call up the editor on that file and allow the user to modify it, and then read it back in, replacing the original file. If a file-name is given, then edit that file and load it, making the circuit the current one. The editor may be defined in **.spiceinit** or **spinit** by a command line like

```
set editor=emacs
```

Using MS Winows, to allow the **edit** command calling an editor, you will have to add the editor's path to the PATH variable of the command prompt windows (see here). **edit** then calls cmd.exe with e.g. notepad++ and `file` as parameter, if you have set

```
set editor=notepad++.exe
```

to **.spiceinit** or **spinit**.

17.5.22 Eprint*: Print an event driven node (only used with XSPICE option)

General Form:

```
eprint node
```

Print an event driven node generated or used by an XSPICE 'A' device. These nodes are vectors not organized in plots. See chapt. 26.2.2 for an example.

17.5.23 FFT: fast Fourier transform of vectors

General Form:

```
fft vector1 [vector2] ...
```

This analysis provides a fast Fourier transform of the input vector(s). fft is much faster than spec (17.5.63) (about a factor of 50 to 100 for larger vectors) !

The fft command will create a new plot consisting of the Fourier transforms of the vectors given on the command line. Each vector given should be a transient analysis result, i.e. it should have 'time' as a scale. You will have got these vectors by the **tran Tstep Tstop Tstart** command.

The vector should have a linear equidistant time scale. Therefore linearization using the **linearize** command is recommended before running fft. Be careful selecting a Tstep value small enough for good interpolation, e.g. much smaller than any signal period to be resolved by **fft** (see **linearize** command). The Fast Fourier Transform will be computed using a window function as given with the specwindow variable. Its code is based on the FFT function provided at http://local.wasp.uwa.edu.au/~pbourke/other/dft/, downloaded April 5th, 2008. A new plot named spec**x** will be generated with a new vector (having the same name as the input vector, see command above) containing the transformed data.

How to compute the fft from a transient simulation output:

```
ngspice 8 -> setplot tran1
ngspice 9 -> linearize V(2)
ngspice 9 -> set specwindow=blackman
ngspice 10 -> fft V(2)
ngspice 11 -> plot mag(V(2))
```

`Linearize` will create a new vector V(2) in a new plot **tran2**. The command `fft V(2)` will create a new plot **spec1** with vector V(2) holding the resulting data.

The variables listed in the following table control operation of the **fft** command. Each can be set with the set command before calling **fft**.

specwindow: This variable is set to one of the following strings, which will determine the type of windowing used for the Fourier transform in the spec command. If not set, the default is "hanning".

none No windowing

rectangular Rectangular window

bartlet Bartlett (also triangle) window

blackman Blackman window

hanning Hanning (also hann or cosine) window

hamming Hamming window

gaussian Gaussian window

flattop Flat top window

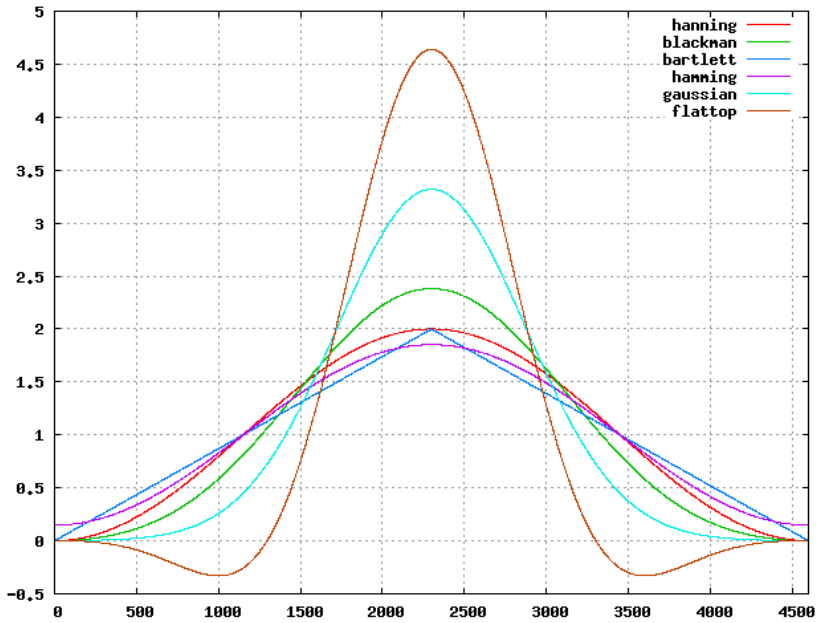

Figure 17.1: Spec and FFT window functions (Gaussian order = 4)

specwindoworder: This can be set to an integer in the range 2-8. This sets the order when the Gaussian window is used in the spec command. If not set, order 2 is used.

17.5.24 Fourier: Perform a Fourier transform

General Form:

```
fourier fundamental_frequency [value ...]
```

Does a fourier analysis of each of the given values, using the first 10 multiples of the fundamental frequency (or the first nfreqs, if that variable is set - see below). The output is like that of the `.four` ngspice line (chapter 15.5.4). The values may be any valid expression. The values are interpolated onto a fixed-space grid with the number of points given by the fourgridsize variable, or 200 if it is not set. The interpolation is of degree polydegree if that variable is set, or 1. If polydegree is 0, then no interpolation is done. This is likely to give erroneous results if the time scale is not monotonic, though.

17.5.25 Gnuplot: Graphics output via Gnuplot

General Form:

```
gnuplot file plotargs
```

Like plot, but using gnuplot for graphics output and further data manipulation. ngspice creates a file called `file.plt` containing the gnuplot command sequence, a file called `file.data` containing the data to be plotted, and a file called `file.eps` containing a postscript hard-copy of

the plot. On LINUX gnuplot is called via xterm, which offers a gnuplot console to manipulate the data. On Windows a gnuplot command console window is opened as well as the plot window. Of course you have to have gnuplot installed properly on your system. This option will work with Gnuplot version 4.2.6, not with version 4.4, but again with 4.5 (as of August 2011).

17.5.26 Hardcopy: Save a plot to a file for printing

General Form:

```
hardcopy file plotargs
```

Just like plot, except that it creates a file called `file` containing the plot. The file is a postscript image. As an alternative the plot(5) format is available by setting the hcopydevtype variable to `plot5`, and can be printed by either the plot(1) program or lpr with the -g flag.

17.5.27 Inventory: Print circuit inventory

General Form:

```
inventory
```

This commands accepts no argument and simply prints the number of instances of a particular device in a loaded netlist.

17.5.28 Help: Print summaries of Ngspice commands

Prints help. This help information, however, is spice3f5-like, stemming from 1991 and thus is outdated. If the argument `all` is given, a short description of everything you could possibly type is printed. If commands are given, descriptions of those commands are printed. Otherwise help for only a few major commands is printed. On Windows this **help** command is no longer available. Spice3f5 compatible help may be found at Spice 3 User manual. For ngspice please use this manual.

17.5.29 History: Review previous commands

General Form:

```
history [number]
```

Print out the history, or the last `number` commands typed at the keyboard.

17.5.30 Iplot*: Incremental plot

General Form:

```
iplot [ node ...]
```

Incrementally plot the values of the nodes while ngspice runs. The iplot command can be used with the where command to find trouble spots in a transient simulation.

17.5.31 Jobs*: List active asynchronous ngspice runs

General Form:

```
jobs
```

Report on the asynchronous ngspice jobs currently running. Ngnutmeg checks to see if the jobs are finished every time you execute a command. If it is done then the data is loaded and becomes available.

17.5.32 Let: Assign a value to a vector

General Form:

```
let name = expr
```

Creates a new vector called name with the value specified by expr, an expression as described above. If expr is [] (a zero-length vector) then the vector becomes undefined. Individual elements of a vector may be modified by appending a subscript to name (ex. name[0]). If there are no arguments, let is the same as display.

The command **let** creates a vector in the current plot, use **setplot** (17.5.55) to create a new plot.

See also **unlet** (17.5.75), **compose** (17.5.11).

17.5.33 Linearize*: Interpolate to a linear scale

General Form:

```
linearize vec ...
```

Create a new plot with all of the vectors in the current plot, or only those mentioned as arguments to the command, all data linearized onto an equidistant time scale.

How compute the fft from a transient simulation output:

```
ngspice 8 -> setplot tran1
ngspice 9 -> linearize V(2)
ngspice 9 -> set specwindow=blackman
ngspice 10 -> fft V(2)
ngspice 11 -> plot mag(V(2))tstep
```

`Linearize` will create new vectors **vec** or renew all vectors of the current plot if no arguments are given. The new vectors are interpolated onto a linear time scale, which is determined by the values of `tstep`, `tstart`, and `tstop` in the currently active transient analysis. The currently loaded input file must include a transient analysis (a tran command may be run interactively before the last reset, alternately), and the current plot must be from this transient analysis. The length of the new vector is `(tstop - tstart) / tstep + 1.5`. This command is needed for example if you want to do a fft analysis (17.5.23). Please note that the parameter `tstep` of your transient analysis (see chapter 15.3.9) has to be small enough to get adequate resolution, otherwise the command `linearize` will do sub-sampling of your signal.

17.5.34 Listing*: Print a listing of the current circuit

General Form:

```
listing [logical] [physical] [deck] [expand] [param]
```

If the **logical** argument is given, the listing is with all continuation lines collapsed into one line, and if the **physical** argument is given the lines are printed out as they were found in the file. The default is logical. A **deck** listing is just like the physical listing, except without the line numbers it recreates the input file verbatim (except that it does not preserve case). If the word **expand** is present, the circuit is printed with all subcircuits expanded. The option **param** allows to print all parameters and their actual values.

17.5.35 Load: Load rawfile data

General Form:

```
load [filename] ...
```

Loads either binary or ascii format rawfile data from the files named. The default file-name is rawspice.raw, or the argument to the -r flag if there was one.

17.5.36 Meas*: Mesurements on simulation data

General Form (example):

```
MEAS {DC|AC|TRAN|SP} result TRIG trig_variable VAL=val <TD=td>
<CROSS=# | CROSS=LAST> <RISE=#|RISE=LAST> <FALL=#|FALL=LAST>
<TRIG AT=time> TARG targ_variable VAL=val <TD=td> <CROSS=# | CROSS=LAST>
<RISE=#|RISE=LAST> <FALL=#|FALL=LAST> <TRIG AT=time>
```

Most of the input forms found in 15.4 may be used here with the command `meas` instead of `.meas(ure)`. Using meas inside the .control ... .endc section offers additional features compared to the .meas use. meas will print the results as usual, but in addition will store its measurement result (typically the token **`result`** given in the command line) in a vector. This vector may be used in following command lines of the script as an input value of another command. For details of the command see chapt. 15.4. The measurement type **SP** is only available here, because a `fft` command will prepare the data for **SP** measurement.

Unfortunately **par('expression')** (15.5.6) will not work here, i.e. inside the .control section. You may use an expression by the **let** command instead, giving `let vec_new = expression`.

Replacement for par('expression') in meas inside the .control section

```
let vdiff = v(n1)-v(n0)
meas tran vtest find vdiff at=0.04e-3
*the following will not do here:
*meas tran vtest find par('v(n1)-v(n0)') at=0.04e-3
```

17.5.37 Noise*: Noise analysis

See the .NOISE analysis (15.3.4) for details.

The `noise` command will generate two plots (typically named noise1 and noise2) with Noise Spectral Density Curves and Integrated Noise data. To write these data into output file(s), you may use the following command sequence:

Command sequence for writing noise data to file(s):

```
.control
tran 1e-6 1e-3
write test_tran.raw
noise V(out) vinp dec 333 1 1e8 16
print inoise_total onoise_total
*first option to get all of the output (two files)
setplot noise1
write test_noise1.raw all
setplot noise2
write test_noise2.raw all
* second option (all in one raw-file)
write testall.raw noise1.all noise2.all
.endc
```

17.5.38 Op*: Perform an operating point analysis

General Form:

```
op
```

Do an operating point analysis. See chapter 15.3.5 for more details.

17.5.39 Option*: Set a ngspice option

General Form:

```
option [option=val] [option=val] ...
```

Set any of the simulator variables as listed in chapt. 15.1. See this chapter also for more information on the available options. The `option` command without any argument lists the actual options set in the simulator (to be verified). Multiple options may be set in a single line.

The following example demonstrates a control section, which may be added to your circuit file to test the influence of variable trtol on the number of iterations and on the simulation time.

Command sequence for testing option trtol:

```
.control
set noinit

option trtol=1
echo
echo trtol=1
run
rusage traniter trantime
reset
option trtol=3
echo
echo trtol=3
run
rusage traniter trantime
reset
option trtol=5
echo
echo trtol=5
run
rusage traniter trantime
reset
option trtol=7
echo
echo trtol=7
run
rusage traniter trantime
plot tran1.v(out25) tran1.v(out50) v(out25)  v(out50)
.endc
```

17.5.40 Plot: Plot values on the display

General Form:

```
plot exprs [ylimit ylo yhi] [xlimit xlo xhi] [xindices xilo xihi]
[xcompress comp] [xdelta xdel] [ydelta ydel] [xlog] [ylog] [loglog]
[vs xname] [xlabel word] [ylabel word] [title word] [samep]
[linear]
```

Plot the given vectors or exprs on the screen (if you are on a graphics terminal). The xlimit and ylimit arguments determine the high and low x- and y-limits of the axes, respectively. The xindices arguments determine what range of points are to be plotted - everything between the xilo'th point and the xihi'th point is plotted. The xcompress argument specifies that only one out of every comp points should be plotted. If an xdelta or a ydelta parameter is present, it specifies the spacing between grid lines on the X- and Y-axis. These parameter names may be abbreviated to xl, yl, xind, xcomp, xdel, and ydel respectively.

The xname argument is an expression to use as the scale on the x-axis. If xlog or ylog are present then the X or Y scale, respectively, is logarithmic (loglog is the same as specifying

both). The xlabel and ylabel arguments cause the specified labels to be used for the X and Y axes, respectively.

If samep is given, the values of the other parameters (other than xname) from the previous plot, hardcopy, or asciiplot command is used unless re-defined on the command line.

The title argument is used in the place of the plot name at the bottom of the graph.

The linear keyword is used to override a default logscale plot (as in the output for an AC analysis).

Finally, the keyword **polar** generates a polar plot. To produce a smith plot, use the keyword **smith**. Note that the data is transformed, so for smith plots you will see the data transformed by the function (x-1)/(x+1). To produce a polar plot with a smith grid but without performing the smith transform, use the keyword **smithgrid**.

If you specify **plot all**, all vectors (including the scale vector) are plotted versus the scale vector (see commands display (17.5.19) or setscale (17.5.56) on viewing the vectors of the current plot). The command **plot ally** will not plot the scale vector, but all other 'real' y values. The command **plot alli** will yield all current vectors, the command **plot allv** all voltage vectors.

If the vector name to be plotted contains -, or / or other tokens which may be taken for operators of an expression, and plotting fails, try enclosing the name in double quotes, e.g. **plot "/vout"**.

17.5.41 Print: Print values

General Form:

```
print [col] [line] expr ...
```

Prints the vector(s) described by the expression expr. If the col argument is present, print the vectors named side by side. If line is given, the vectors are printed horizontally. col is the default, unless all the vectors named have a length of one, in which case line is the default. The options width, length, and nobreak are effective for this command (see asciiplot). If the expression is all, all of the vectors available are printed. Thus print col all > file prints everything in the file in SPICE2 format. The scale vector (time, frequency) is always in the first column unless the variable noprintscale is true. You may use the vectors alli, allv, ally with the print command, but then the scale vector will not be printed.

Examples:

```
set width=300
print all

set length=500
```

17.5.42 Quit: Leave Ngspice or Nutmeg

General Form:

```
quit
```

Quit ngnutmeg or ngspice. Ngspice will ask for an acknowledgment if parameters have not been saved. If **'set noaskquit'** is specified, ngspice will terminate immediately.

17.5.43 Rehash: Reset internal hash tables

General Form:

```
rehash
```

Recalculate the internal hash tables used when looking up UNIX commands, and make all UNIX commands in the user's PATH available for command completion. This is useless unless you have set unixcom first (see above).

17.5.44 Remcirc*: Remove the current circuit

General Form:

```
remcirc
```

This command removes the current circuit from the list of circuits sourced into ngspice. To select a specific circuit, use **setcirc** (17.5.54). To load another circuit, refer to **source** (17.5.62). The new actual circuit will the circuit on top of the list of the remaining circuits.

17.5.45 Reset*: Reset an analysis

General Form:

```
reset
```

Throw out any intermediate data in the circuit (e.g, after a breakpoint or after one or more analyses have been done already), and re-parse the input file. The circuit can then be re-run from it's initial state, overriding the affect of any set or alter commands.

Reset may be required in simulation loops preceeding any **run** (or **tran** ...) command.

17.5.46 Reshape: Alter the dimensionality or dimensions of a vector

General Form:

```
reshape vector vector ...
or
reshape vector vector ... [ dimension, dimension, ... ]
or
reshape vector vector ... [ dimension ][ dimension ] ...
```

This command changes the dimensions of a vector or a set of vectors. The final dimension may be left off and it will be filled in automatically. If no dimensions are specified, then the dimensions of the first vector are copied to the other vectors. An error message of the form 'dimensions of x were inconsistent' can be ignored.

17.5.47 Resume*: Continue a simulation after a stop

General Form:

```
resume
```

Resume a simulation after a stop or interruption (control-C).

17.5.48 Rspice*: Remote ngspice submission

General Form:

```
rspice input file
```

Runs a ngspice remotely taking the input file as a ngspice input file, or the current circuit if no argument is given. Ngnutmeg or ngspice waits for the job to complete, and passes output from the remote job to the user's standard output. When the job is finished the data is loaded in as with aspice. If the variable rhost is set, ngnutmeg connects to this host instead of the default remote ngspice server machine. This command uses the "rsh" command and thereby requires authentication via a "`.rhosts`" file or other equivalent method. Note that "rsh" refers to the "remote shell" program, which may be "remsh" on your system; to override the default name of "rsh", set the variable `remote_shell`. If the variable `rprogram` is set, then rspice uses this as the pathname to the program to run on the remote system.

Note: rspice will not acknowledge elements that have been changed via the "alter" or "altermod" commands.

17.5.49 Run*: Run analysis from the input file

General Form:

```
run [rawfile]
```

Run the simulation as specified in the input file. If there were any of the control lines .ac, .op, .tran, or .dc, they are executed. The output is put in **rawfile** if it was given, in addition to being available interactively.

17.5.50 Rusage: Resource usage

General Form:

```
rusage [resource ...]
```

Print resource usage statistics. If any resources are given, just print the usage of that resource. Most resources require that a circuit be loaded. Currently valid resources are:

decklineno Number of lines in deck

netloadtime Nelist loading time

netparsetime Netlist parsing time

elapsed The amount of time elapsed since the last rusage elapsed call.

faults Number of page faults and context switches (BSD only).

space Data space used.

time CPU time used so far.

temp Operating temperature.

tnom Temperature at which device parameters were measured.

equations Circuit Equations

time Total Analysis Time

totiter Total iterations

accept Accepted time-points

rejected Rejected time-points

loadtime Time spent loading the circuit matrix and RHS.

reordertime Matrix reordering time

lutime L-U decomposition time

solvetime Matrix solve time

trantime Transient analysis time

tranpoints Transient time-points

traniter Transient iterations

trancuriters Transient iterations for the last time point*

tranlutime Transient L-U decomposition time

transolvetime Transient matrix solve time

everything All of the above.

* listed incorrectly as "Transient iterations per point".

17.5.51 Save*: Save a set of outputs

General Form:

```
save [all | allv | alli | output ...]
```

Save a set of outputs, discarding the rest. Maybe used to dramatically reduce memory (RAM) requirements if only a few useful nodes or branches are saved. If a node has been mentioned in a save command, it appears in the working plot after a run has completed, or in the rawfile if ngspice is run in batch mode. If a node is traced or plotted (see below) it is also saved. For backward compatibility, if there are no save commands given, all outputs are saved.

When the keyword "all" or the keyword "allv", appears in the save command, all node voltages, voltage source currents and inductor currents are saved in addition to any other values listed. If the keyword "alli" appears in the save command, all device currents are saved.

Note: the current implementation saves only the currents of devices which have internal nodes, i.e. MOSFETs with non zero RD and RS; BJTs with non-zero RC, RB and RE; DIODEs with non-zero RS; etc. Resistor and capacitor currents are not saved with this option. These deficiencies will be addressed in a later revision.

Save voltage and current:

```
save vd_node vs#branch
```

Note: `save` will not accept vectors (in contrast to `.save`). Nodes or branches have to be specified for `<output>` ! In the `.control .... .endc` section `save` should occur before the `run` or `tran` command to become effective. **`Save`** allows to store and later access internal device parameters. e.g. in a command like

Save internal parameters:

```
save all @mn1[gm]
```

which saves all analysis output data plus **`gm`** of transistor mn1 to the internal memory (see also 17.2).

`save` may store data from a device residing indside of a subcircuit:

Save internal parameters:

```
save @m.xmos3.mn1[gm]
```

Please see chapter 30 for an explanation of the syntax.

17.5.52 Sens*: Run a sensitivity analysis

General Form:

```
sens output_variable
sens output_variable ac ( DEC | OCT | LIN ) N Fstart Fstop
```

Perform a Sensitivity analysis. `output_variable` is either a node voltage (ex. "`v(1)`" or "`v(A,out)`") or a current through a voltage source (ex. "`i(vtest)`"). The first form calculates DC sensitivities, the second form calculates AC sensitivities. The output values are in dimensions of change in output per unit change of input (as opposed to percent change in output or per percent change of input).

17.5.53 Set: Set the value of a variable

General Form:

```
set [word]
set [word = value] ...
```

Set the value of word to be value, if it is present. You can set any word to be any value, numeric or string. If no value is given then the value is the Boolean 'true'. If you enter a string containing spaces, you have to enclose it with double quotes.

The value of word may be inserted into a command by writing `$word`. If a variable is set to a list of values that are enclosed in parentheses (which must be separated from their values by white space), the value of the variable is the list.

The variables used by ngspice are listed in section 17.7.

`Set` entered without any parameter will list all variables set, and their values, if applicable.

17.5.54 Setcirc*: Change the current circuit

General Form:

```
setcirc [circuit name]
```

The current circuit is the one that is used for the simulation commands below. When a circuit is loaded with the source command (see below, 17.5.62) it becomes the current circuit.

`Setcirc` followed by 'return' without any parameter will list all circuits loaded.

17.5.55 Setplot: Switch the current set of vectors

General Form:

```
setplot [plotname]
```

Set the current plot to the plot with the given name, or if no name is given, prompt the user with a menu. (Note that the plots are named as they are loaded, with names like `tran1` or `op2`. These names are shown by the setplot and display commands and are used by diff, below.) If the "`New plot`" item is selected, the current plot becomes one with no vectors defined.

Note that here the word "plot" refers to a group of vectors that are the result of one ngspice run. When more than one file is loaded in, or more than one plot is present in one file, ngspice keeps them separate and only shows you the vectors in the current plot.

17.5.56 Setscale: Set the scale vector for the current plot

General Form:

```
setscale [vector]
```

Defines the scale vector for the current plot. If no argument is given, the current scale vector is printed. The scale vector delivers the values for the x-axis in a 2D plot.

17.5.57 Settype: Set the type of a vector

General Form:

```
settype type vector ...
```

Change the type of the named vectors to `type`. Type names can be found in the following table.

Type	Unit		Type	Unit
notype			pole	
time	s		zero	
frequency	Hz		s-param	
voltage	V		temp-sweep	Celsius
current	A		res-sweep	Ohms
onoise-spectrum	(V or A)^2/Hz		impedance	Ohms
onoise-integrated	V or A		admittance	Mhos
inoise-spectrum	(V or A)^2/Hz		power	W
inoise-integrated	V or A		phase	Degree
			decibel	dB

17.5.58 Shell: Call the command interpreter

General Form:

```
shell [ command ]
```

Call the operating system's command interpreter; execute the specified command or call for interactive use.

17.5.59 Shift: Alter a list variable

General Form:

```
shift [varname] [number]
```

If `varname` is the name of a list variable, it is shifted to the left by number elements (i.e, the number leftmost elements are removed). The default `varname` is `argv`, and the default number is 1.

17.5.60 Show*: List device state

General Form:

```
show devices [ : parameters ] , ...
```

The show command prints out tables summarizing the operating condition of selected devices. If `devices` is missing, a default set of devices are listed, if `devices` is a single letter, devices of that type are listed. A device's full name may be specified to list only that device. Finally, devices may be selected by model by using the form "#modelname".

If no parameters are specified, the values for a standard set of parameters are listed. If the list of parameters contains a "+", the default set of parameters is listed along with any other specified parameters.

For both devices and parameters, the word "all" has the obvious meaning.

Note: there must be spaces separating the ":" that divides the device list from the parameter list.

17.5.61 Showmod*: List model parameter values

General Form:

```
showmod models [ : parameters ] , ...
```

The showmod command operates like the show command (above) but prints out model parameter values. The applicable forms for `models` are a single letter specifying the device type letter (e.g. m, or c), a device name (e.g. m.xbuf22.m4b), or #modelname (e.g. #p1).

17.5.62 Source: Read a ngspice input file

General Form:

```
source infile
```

For ngspice: read the ngspice input file **infile**, containing a circuit netlist. Ngnutmeg and ngspice commands may be included in the file, and must be enclosed between the lines `.control` and `.endc`. These commands are executed immediately after the circuit is loaded, so a control line of `ac ...` works the same as the corresponding .ac card. The first line in any input file is considered a title line and not parsed but kept as the name of the circuit. Thus, a ngspice command script in **infile** must begin with a blank line and then with a .control line. Also, any line starting with the characters *# is considered as a control line (.control and .endc is placed around this line automatically.). The exception to these rules are the files **spinit** (16.5) and **.spiceinit** (16.6).

For ngutmeg: reads commands from the file **infile**. Lines beginning with the character * are considered comments and are ignored.

17.5.63 Spec: Create a frequency domain plot

General Form:

```
spec start_freq stop_freq step_freq vector [vector ...]
```

Calculates a new complex vector containing the Fourier transform of the input vector (typically the linearized result of a transient analysis). The default behavior is to use a Hanning window, but this can be changed by setting the variables specwindow and specwindoworder appropriately.

Typical usage:

```
ngspice 13 -> linearize
ngspice 14 -> set specwindow = "blackman"
ngspice 15 -> spec 10 1000000 1000 v(out)
ngspice 16 -> plot mag(v(out))
```

Possible values for specwindow are: none, hanning, cosine, rectangular, hamming, triangle, bartlet, blackman, gaussian and flattop. In the case of a gaussian window specwindoworder is a number specifying its order. For a list of window functions see 17.5.23.

17.5.64 Status*: Display breakpoint information

General Form:

```
status
```

Display all of the traces and breakpoints currently in effect.

17.5.65 Step*: Run a fixed number of time-points

General Form:

```
step [number]
```

Iterate number times, or once, and then stop.

17.5.66 Stop*: Set a breakpoint

General Form:

```
stop [ after n] [ when value cond value ] ...
```

Set a breakpoint. The argument after `n` means stop after iteration number "n", and the argument `when value cond value` means stop when the first value is in the given relation with the second value, the possible relations being

Symbol	Alias	Meaning
=	eq	equal to
<>	ne	not equal
>	gt	greater than
<	lt	less than
>=	ge	greater than or equal to
<=	le	less than or equal to

Symbol or alias may be used alternatively. All stop commands have to be given in the control flow before the run command. The values above may be node names in the running circuit, or real values. If more than one condition is given, e.g.

```
stop after 4 when v(1) > 4 when v(2) < 2,
```

the conjunction of the conditions is implied. If the condition is met, the simulation and control flow are interrupted, and ngspice waits for user input.

In a transient simulation the '=' or 'eq' will only work with vector 'time' in commands like

```
stop when time = 200n.
```

Internally a breakpoint will be set at the time requested. Multiple breakpoints may be set. If the first stop condition is met, the simulation is interrupted, the commands following run or tran (e.g. alter or altermod) are executed, then the simulation may continue at the first resume command. The next breakpoint requires another resume to continue automatically. Otherwise the simulation stops and ngspice waits for user input.

If you try to stop at

```
stop when V(1) eq 1
```

(or similar) during a transient simulation, you probably will miss this point, because it is not very likely that at any time step the vector v(1) will have the exact value of 1. Then ngspice simply will not stop.

17.5.67 Strcmp: Compare two strings

General Form:

```
strcmp _flag $string1 "string2"
```

The command compares two strings, either given by a variable (string1) or as a string in quotes ("string2"). _flag is set as an output variable to '0', if both strings are equal. A value greater than zero indicates that the first character that does not match has a greater value in str1 than in str2; and a value less than zero indicates the opposite (like the C strcmp function).

17.5.68 Sysinfo*: Print system information

General Form:

```
sysinfo
```

The command prints system information useful for sending bug report to developers. Information consists of:

- Name of the operating system,
- CPU type,
- Number of physical processors (not available under Windows OS), number of logical processors,
- Total amount of DRAM available,
- DRAM currently available.

The example below shows the use of this command.

```
ngspice 1 -> sysinfo
OS: CYGWIN_NT-5.1 1.5.25(0.156/4/2) 2008-06-12 19:34
CPU: Intel(R) Pentium(R) 4 CPU 3.40GHz
Logical processors: 2
Total DRAM available = 1535.480469 MB.
DRAM currently available = 984.683594 MB.
ngspice 2 ->
```

This command has been tested under Windows OS and LINUX. It may not be available in your operating system environment.

17.5.69 Tf*: Run a Transfer Function analysis

General Form:

```
tf output_node input_source
```

The tf command performs a transfer function analysis, returning:

- the transfer function (output/input),
- output resistance,
- and input resistance

between the given output node and the given input source. The analysis assumes a small-signal DC (slowly varying) input. The following example file

Example input file:

```
* Tf test circuit
vs    1    0    dc 5
r1    1    2    100
r2    2    3    50
r3    3    0    150
r4    2    0    200

.control
tf v(3,5) vs
print all
.endc

.end
```

will yield the following output:

```
transfer_function = 3.750000e-001
output_impedance_at_v(3,5) = 6.662500e+001
vs#input_impedance = 2.000000e+002
```

17.5.70 Trace*: Trace nodes

General Form:

```
trace [ node ...]
```

For every step of an analysis, the value of the node is printed. Several traces may be active at once. Tracing is not applicable for all analyses. To remove a trace, use the delete command.

17.5.71 Tran*: Perform a transient analysis

General Form:

```
tran Tstep Tstop [ Tstart [ Tmax ] ] [ UIC ]
```

Perform a transient analysis. See chapter 15.3.9 of this manual for more details.

17.5.72 Transpose: Swap the elements in a multi-dimensional data set

General Form:

```
transpose vector vector ...
```

This command transposes a multidimensional vector. No analysis in ngspice produces multidimensional vectors, although the DC transfer curve may be run with two varying sources. You must use the "reshape" command to reform the one-dimensional vectors into two dimensional vectors. In addition, the default scale is incorrect for plotting. You must plot versus the vector corresponding to the second source, but you must also refer only to the first segment of this second source vector. For example (circuit to produce the transfer characteristic of a MOS transistor):

How to produce the transfer characteristic of a MOS transistor:

```
ngspice > dc vgg 0 5 1 vdd 0 5 1
ngspice > plot i(vdd)
ngspice > reshape all [6,6]
ngspice > transpose i(vdd) v(drain)
ngspice > plot i(vdd) vs v(drain)[0]
```

17.5.73 Unalias: Retract an alias

General Form:

```
unalias [word ...]
```

Removes any aliases present for the words.

17.5.74 Undefine: Retract a definition

General Form:

```
undefine function
```

Definitions for the named user-defined functions are deleted.

17.5.75 Unlet: Delete the specified vector(s)

General Form:

```
unlet vector [ vector ... ]
```

Delete the specified vector(s). See also **let** (17.5.32).

17.5.76 Unset: Clear a variable

General Form:

```
unset [word ...]
```

Clear the value of the specified variable(s) (word).

17.5.77 Version: Print the version of ngspice

General Form:

```
version [-s | -f | <version id>]
```

Print out the version of ngnutmeg that is running, if invoked without argument or with **-s** or **-f**. If the argument is a **<version id>** (any string different from **-s** or **-f** is considered a **<version id>**), the command checks to make sure that the arguments match the current version of ngspice. (This is mainly used as a `Command:` line in rawfiles.)

Options description:

- No option: The output of the command is the message you can see when running ngspice from the command line, no more no less.
- **-s**(hort): A shorter version of the message you see when calling ngspice from the command line.
- **-f**(ull): You may want to use this option if you want to know what extensions are included into the simulator and what compilation switches are active. A list of compilation options and included extensions is appended to the normal (not short) message. May be useful when sending bug reports.

The following example shows what the command returns is some situations:

Use of the version command:

```
ngspice 10 -> version
******
** ngspice-24 : Circuit level simulation program
** The U. C. Berkeley CAD Group
** Copyright 1985-1994, Regents of the University of California.
** Please get your ngspice manual from
            http://ngspice.sourceforge.net/docs.html
** Please file your bug-reports at
            http://ngspice.sourceforge.net/bugrep.html
** Creation Date: Jan  1 2011   13:36:34
******
ngspice 2 ->
ngspice 11 -> version 14
Note: rawfile is version 14 (current version is 24)
ngspice 12 -> version 24
ngspice 13 ->
```

> Note for developers: The option listing returned when version is called with the `-f` flag is built at compile time using `#ifdef` blocks. When new compile switches are added, if you want them to appear on the list, you have to modify the code in `misccoms.c`.

17.5.78 Where*: Identify troublesome node or device

General Form:

```
where
```

When performing a transient or operating point analysis, the name of the last node or device to cause non-convergence is saved. The where command prints out this information so that you can examine the circuit and either correct the problem or make a bug report. You may do this either in the middle of a run or after the simulator has given up on the analysis. For transient simulation, the iplot command can be used to monitor the progress of the analysis. When the analysis slows down severely or hangs, interrupt the simulator (with control-C) and issue the where command. Note that only one node or device is printed; there may be problems with more than one node.

17.5.79 Wrdata: Write data to a file (simple table)

General Form:

```
wrdata [file] [vecs]
```

Writes out the vectors to `file`.

This is a very simple printout of data in array form. Column one is the default scale data, column two the simulated data. If more than one vector is given, the third column again is the default

scale, the fourth the data of the second vector. The default format is ASCII. All vectors have to stem from the same plot, otherwise a seg fault may occur. No further information is written to the file, so you have to keep track of your multiple outputs. The format may be changed in the near future.

output example from two vectors:

```
0.000000e+000  -1.845890e-006  0.000000e+000  0.000000e+000
7.629471e+006   4.243518e-006  7.629471e+006 -4.930171e-006
1.525894e+007  -5.794628e-006  1.525894e+007  4.769020e-006
2.288841e+007   5.086875e-006  2.288841e+007 -3.670687e-006
3.051788e+007  -3.683623e-006  3.051788e+007  1.754215e-006
3.814735e+007   1.330798e-006  3.814735e+007 -1.091843e-006
4.577682e+007  -3.804620e-007  4.577682e+007  2.274678e-006
5.340630e+007   9.047444e-007  5.340630e+007 -3.815083e-006
6.103577e+007  -2.792511e-006  6.103577e+007  4.766727e-006
6.866524e+007   5.657498e-006  6.866524e+007 -2.397679e-006
....
```

If variable **appendwrite** is set, the data may be added to an existing file.

17.5.80 Write: Write data to a file (Spice3f5 format)

General Form:

```
write [file] [exprs]
```

Writes out the expressions to `file`.

First vectors are grouped together by plots, and written out as such (i.e, if the expression list contained three vectors from one plot and two from another, then two plots are written, one with three vectors and one with two). Additionally, if the scale for a vector isn't present, it is automatically written out as well.

The default format is a compact binary, but this can be changed to ASCII with the set filetype=ascii command. The default file name is `rawspice.raw`, or the argument to the `-r` flag on the command line, if there was one, and the default expression list is all.

If variable **appendwrite** is set, the data may be added to an existing file.

17.5.81 Wrs2p: Write scattering parameters to file (Touchstone® format)

General Form:

```
wrs2p [file]
```

Writes out the s-parameters of a two-port to `file`.

In the active plot the following is required: vectors **frequency, S11 S12 S21 S22**, all having the same length and having complex values (as a result of an ac analysis), and vector **Rbase**. For details how to generate these data see chapt. 17.9.

The file format is Touchstone® Version 1, ASCII, frequency in Hz, real and imaginary parts of **Snn** versus frequency.

The default file name is `s-param.s2p`.

output example:

```
!2-port S-parameter file
!Title: test for scattering parameters
!Generated by ngspice at Sat Oct 16 13:51:18  2010
# Hz S RI R 50
!freq            ReS11           ImS11
ReS21           ...
 2.500000e+006  -1.358762e-003  -1.726349e-002
9.966563e-001
 5.000000e+006  -5.439573e-003  -3.397117e-002
9.867253e-001
....
```

17.5.82 Xgraph: use the xgraph(1) program for plotting.

General Form:

```
xgraph file [exprs] [plot options]
```

The ngspice/ngnutmeg xgraph command plots data like the plot command but via xgraph, a popular X11 plotting program. If file is either "`temp`" or "`tmp`" a temporary file is used to hold the data while being plotted. For available plot options, see the plot command. All options except for polar or smith plots are supported.

17.6 Control Structures

17.6.1 While - End

General Form:

```
while condition
statement
...
end
```

While condition, an arbitrary algebraic expression, is true, execute the statements.

17.6.2 Repeat - End

General Form:

```
repeat [number]
statement
...
end
```

Execute the statements number times, or forever if no argument is given.

17.6.3 Dowhile - End

General Form:

```
dowhile condition
statement
...
end
```

The same as while, except that the condition is tested after the statements are executed.

17.6.4 Foreach - End

General Form:

```
foreach var value ...
statement
...
end
```

The statements are executed once for each of the values, each time with the variable `var` set to the current one. (`var` can be accessed by the `$var` notation - see below).

17.6.5 If - Then - Else

General Form:

```
if condition
statement
...
else
statement
...
end
```

If the condition is non-zero then the first set of statements are executed, otherwise the second set. The else and the second set of statements may be omitted.

17.6.6 Label

General Form:

```
label word
```

If a statement of the form goto word is encountered, control is transferred to this point, otherwise this is a no-op.

17.6.7 Goto

General Form:

```
goto word
```

If a statement of the form label word is present in the block or an enclosing block, control is transferred there. Note that if the label is at the top level, it must be before the goto statement (i.e, a forward goto may occur only within a block). A block to just include goto on the top level may look like

Example noop block to include forward goto on top level:

```
if (1)
...
goto gohere
...
label gohere
end
```

17.6.8 Continue

General Form:

```
continue
```

If there is a while, dowhile, or foreach block enclosing this statement, control passes to the test, or in the case of foreach, the next value is taken. Otherwise an error results.

17.6.9 Break

General Form:

```
break
```

If there is a while, dowhile, or foreach block enclosing this statement, control passes out of the block. Otherwise an error results.

Of course, control structures may be nested. When a block is entered and the input is the terminal, the prompt becomes a number of >'s corresponding to the number of blocks the user has entered. The current control structures may be examined with the debugging command cdump (see 17.5.9).

17.7 Variables

The operation of both ngutmeg and ngspice may be affected by setting variables with the "set" command (17.5.53). In addition to the variables mentioned below, the "set" command in ngspice also affects the behavior of the simulator via the options previously described under the section on ".OPTIONS" (15.1). You also may define new variables or alter existing variables inside .control ... .endc for later use in your user-defined script (see chapter 17.8).

The following list is in alphabetical order. All of them are acknowledged by ngspice. Frontend variables (e.g. on circuits and simulation) are not defined in ngnutmeg. The predefined variables which may be set or altered by the "set" command are:

appendwrite Append to the file when a write command is issued, if one already exists.

brief If set to `FALSE`, the netlist will be printed.

colorN These variables determine the colors used, if X is being run on a color display. N may be between 0 and 15. Color 0 is the background, color 1 is the grid and text color, and colors 2 through 15 are used in order for vectors plotted. The value of the color variables should be names of colors, which may be found in the file `/usr/lib/rgb.txt`. ngspice for Windows does support only white background (color0=white with black grid and text) or or color0=black with white grid and text.

cpdebug Print control debugging information.

curplotdate Sets the date of the current plot.

curplotname Sets the name of the current plot.

curplottitle Sets the title (a short description) of the current plot.

debug If set then a lot of debugging information is printed.

device The name (`/dev/tty??`) of the graphics device. If this variable isn't set then the user's terminal is used. To do plotting on another monitor you probably have to set both the device and term variables. (If device is set to the name of a file, nutmeg dumps the graphics control codes into this file – this is useful for saving plots.)

diff_abstol The relative tolerance used by the **diff** command (default is 1e-12).

diff_reltol The relative tolerance used by the **diff** command (default is 0.001).

diff_vntol The absolute tolerance for voltage type vectors used by the **diff** command (default is 1e-6).

echo Print out each command before it is executed.

editor The editor to use for the edit command.

filetype This can be either `ascii` or `binary`, and determines the format of the raw file (compact binary or text editor readable ascii). The default is `binary`.

fourgridsize How many points to use for interpolating into when doing Fourier analysis.

gridsize If this variable is set to an integer, this number is used as the number of equally spaced points to use for the Y axis when plotting. Otherwise the current scale is used (which may not have equally spaced points). If the current scale isn't strictly monotonic, then this option has no effect.

gridstyle Sets the grid during plotting with the plot command. Will be overridden by direct entry of gridstyle in the plot command. A linear grid is standard for both x and y axis. Allowed values are `lingrid loglog xlog ylog smith smithgrid polar nogrid`.

hcopydev If this is set, when the hardcopy command is run the resulting file is automatically printed on the printer named hcopydev with the command `lpr -Phcopydev -g file`.

hcopyfont This variable specifies the font name for hardcopy output plots. The value is device dependent.

hcopyfontsize This is a scaling factor for the font used in hardcopy plots.

hcopydevtype This variable specifies the type of the printer output to use in the hardcopy command. If **hcopydevtype** is not set, Postscript format is assumed. `plot (5)` is recognized as an alternative output format. When used in conjunction with **hcopydev**, **hcopydevtype** should specify a format supported by the printer.

hcopyscale This is a scaling factor for the font used in hardcopy plots (between 0 and 10).

hcopywidth Sets width of the hardcopy plot.

hcopyheight Sets height of the hardcopy plot.

hcopypscolor Sets the color of the hardcopy output. If not set, black & white plotting is assumed with different linestyles for each output vector plotted. Setting to any valid color integer value yields a colored plot background (0: black 1: white, others see below) and colored solid lines. This is valid for postscript only.

hcopypstxcolor This variable sets the color of the text in the postscript hardcopy output. If not set, black is assumed on white background, white on black background. Valid colors are 0: black 1: white 2: red 3: blue 4: orange 5: green 6: pink 7: brown 8: khaki 9: plum 10: orchid 11: violet 12: maroon 13: turquoise 14: sienna 15: coral 16: cyan 17: magenta 18: gray for smith grid 19: gray for smith grid 20: gray for normal grid

height The length of the page for asciiplot and print col.

history The number of events to save in the history list.

lprplot5 This is a `printf(3s)` style format string used to specify the command to use for sending plot(5)-style plots to a printer or plotter. The first parameter supplied is the printer name, the second parameter supplied is a file name containing the plot. Both parameters are strings. It is trivial to cause ngspice to abort by supplying a unreasonable format string.

lprps This is a `printf(3s)` style format string used to specify the command to use for sending Postscript plots to a printer or plotter. The first parameter supplied is the printer name, the second parameter supplied is a file name containing the plot. Both parameters are strings. It is trivial to cause ngspice to abort by supplying a unreasonable format string.

modelcard The name of the model card (normally `.MODEL`)

nfreqs The number of frequencies to compute in the Fourier command. (Defaults to 10.)

ngbehavior Sets the compatibility mode of ngspice. To be set in spinit (16.5) or .spiceinit (16.6).Its value `'all'` will inprove compatibility to commercial simulators. Full compatibility is however **not** the intension of ngspice! This value may be set as a standard in the future. `'ps'`, `'hs'` and `'spice3'` are available. See chapt. 16.13.

noaskquit Do not check to make sure that there are no circuits suspended and no plots unsaved. Normally ngspice warns the user when he tries to quit if this is the case.

nobjthack BJTs can have either 3 or 4 nodes, which makes it difficult for the subcircuit expansion routines to decide what to rename. If the fourth parameter has been declared as a model name, then it is assumed that there are 3 nodes, otherwise it is considered a node. To disable this, you can set the variable "nobjthack" which forces BJTs to have 4 nodes (for the purposes of subcircuit expansion, at least).

nobreak Don't have asciiplot and print col break between pages.

noasciiplotvalue Don't print the first vector plotted to the left when doing an asciiplot.

nobjthack Assume that BJTs have 4 nodes.

noclobber Don't overwrite existing files when doing IO redirection.

noglob Don't expand the global characters '*', '?', '[', and ']'. This is the default.

nomoremode If nomoremode is not set, whenever a large amount of data is being printed to the screen (e.g, the print or asciiplot commands), the output is stopped every screenful and continues when a carriage return is typed. If nomoremode is set then data scrolls off the screen without check.

nonomatch If noglob is unset and a global expression cannot be matched, use the global characters literally instead of complaining.

noparse Don't attempt to parse input files when they are read in (useful for debugging). Of course, they cannot be run if they are not parsed.

noprintscale Don't print the scale in the leftmost column when a print col command is given.

nosort Don't have display sort the variable names.

nosubckt Don't expand subcircuits.

notrnoise Switch off the transient noise sources (chapt. 4.1.7).

numdgt The number of digits to print when printing tables of data (a, print col). The default precision is 6 digits. On the VAX, approximately 16 decimal digits are available using double precision, so p should not be more than 16. If the number is negative, one fewer digit is printed to ensure constant widths in tables.

num_threads The number of of threads to be used if OpenMP (see chapt. 16.10) is selected. The default value is 2.

plotstyle This should be one of `linplot`, `combplot`, or `pointplot`. `linplot`, the default, causes points to be plotted as parts of connected lines. `combplot` causes a comb plot to be done. It plots vectors by drawing a vertical line from each point to the X-axis, as opposed to joining the points. `pointplot` causes each point to be plotted separately.

pointchars Set a string as a list of characters to be used as points in a point plot. Standard is ox*+#abcdefhgijklmnpqrstuvwyz. Characters §€ are not allowed.

polydegree The degree of the polynomial that the plot command should fit to the data. If polydegree is N, then nutmeg fits a degree N polynomial to every set of N points and draw 10 intermediate points in between each end point. If the points aren't monotonic, then it tries rotating the curve and reducing the degree until a fit is achieved.

polysteps The number of points to interpolate between every pair of points available when doing curve fitting. The default is 10.

program The name of the current program (argv[0]).

prompt The prompt, with the character '!' replaced by the current event number. Single quotes ' ' are required around the string entered!

rawfile The default name for rawfiles created.

remote_shell Overrides the name used for generating rspice runs (default is "rsh").

renumber Renumber input lines when an input file has .includes.

rndseed Seed value for random number generator (used by sgauss, sunif, and rnd functions). If not set, the process Id is used as seed value.

rhost The machine to use for remote ngspice runs, instead of the default one (see the description of the rspice command, below).

rprogram The name of the remote program to use in the rspice command.

sourcepath A list of the directories to search when a source command is given. The default is the current directory and the standard ngspice library (`/usr/local/lib/ngspice`, or whatever LIBPATH is #defined to in the ngspice source.

specwindow Windowing for commands **`spec`** (17.5.63) or **`fft`** (17.5.23). May be one of the following:
`bartlet blackman cosine gaussian hamming hanning none rectangular triangle`.

specwindoworder Integer value 2 - 8 (default 2), used by commands **`spec`** or **`fft`**.

spicepath The program to use for the aspice command. The default is /cad/bin/spice.

strict_errorhandling If set by the user, an error detected during circuit parsing will immediately lead ngspice to exit with exit code 1 (see 18.5). May be set in files spinit (16.5) or .spiceinit (16.6) only.

subend The card to end subcircuits (normally `.ends`).

subinvoke The prefix to invoke subcircuits (normally `X`).

substart The card to begin subcircuits (normally `.subckt`).

term The mfb name of the current terminal.

ticmarks An integer value n, n tics (a small 'x') will be set on your graph. (Arrangement of the tics ?)

ticlist A list of integers, e.g. (4 14 24) to set tics (small 'x') on your graph.(Arrangement of the tics ?)

units If this is **degrees**, then all the trig functions will use degrees instead of radians.

unixcom If a command isn't defined, try to execute it as a UNIX command. Setting this option has the effect of giving a rehash command, below. This is useful for people who want to use ngnutmeg as a login shell.

wfont Set the font for the graphics plot in MS Windows. Typical fonts are `courier, times, arial` and all others found on your machine. Default is `courier`.

wfont_size The size of the windows font. Default is depending on systems settings, something like

width The width of the page for asciiplot and print col (see also 15.5.7).

x11linearcs Some X11 implementations have poor arc drawing. If you set this option, Ngspice will plot using an approximation to the curve using straight lines.

xbrushwidth Linewidth for grid, border and graph.

xfont Set the font for the graphics plot in X11 (LINUX, Cygwin, etc.). Input format has still to be checked.

17.8 Scripts

Expressions, functions, constants, commands, variables, vectors, and control structures may be assembled into scripts within a .control ... .endc section of the input file. The script allows to automate a more complex ngspice behavior: simulations are performed, output data are the analyzed, simulations repeated with modified parameters, output vectors for plotting are assembled. The ngspice scripting language is not very powerful, but easily integrated into the simulation flow.

The ngspice input file for scripting contains the usual circuit netlist, modelcards, and a script, enclosed in the .control .. .endc section. ngspice is started in interactive mode with the input file in the command line (or sourced later with the **`source`** command). After reading the input file, the command sequence is immediately processed. Variables or vectors set by previous commands may be used in commands following their definition. data may be stored, plotted or grouped into new vectors for additional charts supporting data evaluation.

17.8.1 Variables

Variables are defined and initialized with the **`set`** command (17.5). `set output=10` will defined the variable `output` and set it to a (real) number 10. Predefined variables, which are used inside ngspice for specific purposes, are listed in chapt. 17.7. Variables are accessible globally. The values of variables may be used in commands by writing `$varname` where the value of the variable is to appear, e.g. `$output`. The special variables `$$` and `$<` refer to the process ID of the program and a line of input which is read from the terminal when the variable is evaluated,

respectively. If a variable has a name of the form `$&word`, then word is considered a vector (see below), and its value is taken to be the value of the variable. If `$foo` is a valid variable, and is of type list, then the expression `$foo[low-high]` represents a range of elements. Either the upper index or the lower may be left out, and the reverse of a list may be obtained with `$foo[len-0]`. Also, the notation `$?foo` evaluates to 1 if the variable foo is defined, 0 otherwise, and `$#foo` evaluates to the number of elements in foo if it is a list, 1 if it is a number or string, and 0 if it is a Boolean variable.

17.8.2 Vectors

Ngspice and ngnutmeg data is in the form of vectors: time, voltage, etc. Each vector has a type, and vectors can be operated on and combined algebraically in ways consistent with their types. Vectors are normally created as a result of a transient or dc simulation. They are also established when a data file is read in (see the load command 17.5.35). They can also be created with the let command 17.5.32 inside a script. If a variable has a name of the form $&word, then 'word' is considered a vector, and its value is taken to be the value of the variable.

17.8.3 Commands

Commands have been described in chapter 17.5.

17.8.4 control structures

Control structures have been described in chapter 17.6. Some simple examples will be given below.

Control structure examples:

```
Test sequences for ngspice control structures
*vectors are used (except foreach)
*start in interactive mode

.control

* test sequence for while, dowhile
  let loop = 0
  echo
  echo enter loop with  "$&loop"
  dowhile loop < 3
    echo within dowhile loop "$&loop"
    let loop = loop + 1
  end
  echo after dowhile loop "$&loop"
  echo
  let loop = 0
  while loop < 3
    echo within while loop "$&loop"
    let loop = loop + 1
  end
  echo after while loop "$&loop"
  let loop = 3
  echo
  echo enter loop with  "$&loop"
  dowhile loop < 3
    echo within dowhile loop "$&loop"     $ output expected
    let loop = loop + 1
  end
  echo after dowhile loop "$&loop"
  echo
  let loop = 3
  while loop < 3
    echo within while loop "$&loop"
$ no output expected
    let loop = loop + 1
  end
  echo after while loop "$&loop"
```

Control structure examples (continued):

```
* test for while, repeat, if, break
  let loop = 0
  while loop < 4
    let index = 0
    repeat
      let index = index + 1
      if index > 4
        break
      end
    end
    echo index "$&index"   loop "$&loop"
    let loop = loop + 1
  end

* test sequence for foreach
  echo
  foreach outvar 0 0.5 1 1.5
    echo parameters: $outvar   $ foreach parameters are variables,
                               $ not vectors!
  end

* test for if ... else ... end
  echo
  let loop = 0
  let index = 1
  dowhile loop < 10
    let index = index * 2
    if index < 128
      echo "$&index" lt 128
    else
      echo "$&index"  ge 128
    end
    let loop = loop + 1
  end

* simple test for label, goto
  echo
  let loop = 0
  label starthere
  echo start "$&loop"
  let loop = loop + 1
  if loop < 3
    goto starthere
  end
  echo end "$&loop"
```

Control structure examples (continued):

```
* test for label, nested goto
  echo
  let loop = 0
  label starthere1
  echo start nested "$&loop"
  let loop = loop + 1
  if loop < 3
    if loop < 3
      goto starthere1
    end
  end
  echo end "$&loop"

* test for label, goto
  echo
  let index = 0
  label starthere2
  let loop = 0
  echo We are at start with index "$&index" and loop "$&loop"
  if index < 6
    label inhere
    let index = index + 1
    if loop < 3
      let loop = loop + 1
      if index > 1
        echo jump2
        goto starthere2
      end
    end
    echo jump
    goto inhere
  end
  echo We are at end with index "$&index" and loop "$&loop"
```

Control structure examples (continued):

```
* test goto in while loop
  let loop = 0
  if 1    $ outer loop to allow nested forward label 'endlabel'
    while loop < 10
      if loop > 5
        echo jump
        goto endlabel
      end
      let loop = loop + 1
    end
    echo before  $ never reached
    label endlabel
    echo after "$&loop"
  end

*test for using variables, simple test for label, goto
  set loop = 0
  label starthe
  echo start $loop
  let loop = $loop + 1  $ expression needs vector at lhs
  set loop = "$&loop"   $ convert vector contents to variable
  if $loop < 3
    goto starthe
  end
  echo end $loop
.endc
```

17.8.5 Example script 'spectrum'

A typical example script named **spectrum** is delivered with the ngspice distribution. Even if it is made obsolete by the internal **spec** command (see 17.5.63) and especially by the much faster **fft** command (see 17.5.23), it may act as a good example for getting acquainted with the ngspice (or nutmeg) post-processor language.

As a suitable input for spectrum you may run a ring-oscillator, delivered with ngspice in e.g. test/bsim3soi/ring51_41.cir. For an adequate resolution you will need a simulation time of 1 µs. Then a small control script may start ngspice by loading the R.O. simulation data and start **spectrum**.

Small script to start ngspice, read the simulation data and start spectrum:

```
* test for script 'spectrum'
.control
load ring51_41.out
spectrum 10MEG 2500MEG 1MEG v(out25) v(out50)
.endc
```

17.8.6 Example script for random numbers

Generation and test of random numbers with Gaussian distribution

```
* agauss test in ngspice
* generate a sequence of gaussian distributed random numbers.
* test the distribution by sorting the numbers into
* a histogram (buckets)
.control
  define agauss(nom, avar, sig) (nom + avar/sig * sgauss(0))
  let mc_runs = 200
  let run = 0
  let no_buck = 8                 $ number of buckets
  let bucket = unitvec(no_buck)  $ each element contains 1
  let delta = 3e-11     $ width of each bucket, depends
                        $ on avar and sig
  let lolimit = 1e-09 - 3*delta
  let hilimit = 1e-09 + 3*delta

  dowhile run < mc_runs
    let val = agauss(1e-09, 1e-10, 3) $ get the random number
    if (val < lolimit)
        let bucket[0] = bucket[0] + 1 $ 'lowest' bucket
    end
    let part = 1
    dowhile part < (no_buck - 1)
      if ((val < (lolimit + part*delta)) &
+ (val > (lolimit + (part-1)*delta)))
        let bucket[part] = bucket[part] + 1
                break
      end
      let part = part + 1
    end
    if (val > hilimit)
* 'highest' bucket
      let bucket[no_buck - 1] = bucket[no_buck - 1] + 1
    end
    let run = run + 1
  end

  let part = 0
  dowhile part < no_buck
    let value = bucket[part] - 1
    set value = "$&value"
* print the buckets' contents
    echo $value
    let part = part + 1
  end

.endc
.end
```

17.8.7 Parameter sweep

While there is no direct command to sweep a device parameter during simulation, you may use a script to emulate such behavior. The example input file contains of an resistive divider with R1 and R2, where R1 is swept from a start to a stop value inside of the control section, using the `alter` command (see 17.5.3).

Input file with parameter sweep

```
parameter sweep
* resistive divider, R1 swept from start_r to stop_r
VDD 1 0 DC 1

R1 1 2 1k
R2 2 0 1k

.control
let start_r = 1k
let stop_r = 10k
let delta_r = 1k
let r_act = start_r
* loop
while r_act le stop_r
  alter r1 r_act
  op
  print v(2)
  let r_act = r_act + delta_r
end
.endc

.end
```

17.8.8 Output redirection

The console outputs delivered by commands like **print** (17.5.41), **echo** (17.5.20), or others may be redirected into a text file. `'print vec > filename'` will generate a new file or overwrite an existing file named 'filename', `'echo text >> filename'` will append the new data to the file 'filename'. Output redirection may be mixed with commands like **wrdata**.

Input file with output redirection > and >>

```
** MOSFET Gain Stage (AC): Benchmarking Implementation of BSIM4.0.0 by We
** output redirection into file

M1 3 2 0 0 N1 L=1u W=4u
Rsource 1 2 100k
Rload 3 vdd 25k
Vdd vdd 0 1.8
Vin 1 0 1.2 ac 0.1

.control
ac dec 10 100 1000Meg
plot v(2) v(3)
let flen = length(frequency) $ length of the vector
let loopcounter = 0
echo output test > text.txt  $ start new file test.txt
* loop
while loopcounter lt flen
  let vout2 = v(2)[loopcounter]  $ generate a single point complex vector
  let vout2re = real(vout2)  $ generate a single point real vector
  let vout2im = imag(vout2)  $ generate a single point imaginary vector
  let vout3 = v(3)[loopcounter]  $ generate a single point complex vector
  let vout3re = real(vout3)  $ generate a single point real vector
  let vout3im = imag(vout3)  $ generate a single point imaginary vector
  let freq = frequency[loopcounter] $ generate a single point vector
  echo  bbb "$&freq" "$&vout2re" "$&vout2im" "$&vout3re" "$&vout3im" >>
+text.txt   $ append text and data to file (continued fromm line above)
  let loopcounter = loopcounter + 1
end
.endc

.MODEL N1 NMOS LEVEL=14 VERSION=4.3.0 TNOM=27
.end
```

17.9 Scattering parameters (s-parameters)

17.9.1 Intro

A command line script, available from the ngspice distribution at examples/control_structs/s-param.cir, together with the command wrs2p (see chapt. 17.5.81) allows to calculate, print and plot the scattering parameters S11, S21, S12, and S22 of any two port circuit at varying frequencies.

The printed output using wrs2p is a **Touchstone® version 1** format file. The file follows the format according to The Touchstone File Format Specification, Version 2.0, available from here. An example is given as number 13 on page 15 of that specification.

17.9.2 S-parameter measurement basics

S-parameters allow a two-port description not just by permutating I_1, U_1, I_2, U_2, but using a superposition, leading to a power view of the port (We only look at two-ports here, because multi-ports are not (yet?) implemented.).

You may start with the effective power, being negative or positive

$$P = u \cdot i \tag{17.1}$$

The value of P may be the difference of two real numbers, with K being another real number.

$$ui = P = a^2 - b^2 = (a+b)(a-b) = (a+b)(KK^{-1})(a-b) = \{K(a+b)\}\left\{K^{-1}(a-b)\right\} \tag{17.2}$$

Thus you get

$$K^{-1}u = a + b \tag{17.3}$$

$$Ki = a - b \tag{17.4}$$

and finally

$$a = \frac{u + K^2 i}{2K} \tag{17.5}$$

$$b = \frac{u - K^2 i}{2K} \tag{17.6}$$

By introducing the reference resistance $Z_0 := K^2 > 0$ we get finally the Heaviside transformation

$$a = \frac{u + Z_0 i}{2\sqrt{Z_0}}, \quad b = \frac{u - Z_0 i}{2\sqrt{Z_0}} \tag{17.7}$$

In case of our two-port we subject our variables to a Heaviside transformation

$$a_1 = \frac{U_1 + Z_0 I_1}{2\sqrt{Z_0}} \quad b_1 = \frac{U_1 - Z_0 I_1}{2\sqrt{Z_0}} \tag{17.8}$$

$$a_2 = \frac{U_2 + Z_0 I_2}{2\sqrt{Z_0}} \quad b_2 = \frac{U_2 - Z_0 I_2}{2\sqrt{Z_0}} \tag{17.9}$$

The s-matrix for a two-port then is

$$\begin{pmatrix} b_1 \\ b_2 \end{pmatrix} = \begin{pmatrix} s_{11} & s_{12} \\ s_{21} & s_{22} \end{pmatrix} \begin{pmatrix} a_1 \\ a_2 \end{pmatrix} \tag{17.10}$$

Two obtain s_{11} we have to set $a_2 = 0$. This is accomplished by loading the output port exactly with the reference resistance Z_0, which sinks a current $I_2 = -U_2/Z_0$ from the port.

$$s_{11} = \left(\frac{b_1}{a_1}\right)_{a_2=0} \tag{17.11}$$

$$s_{11} = \frac{U_1 - Z_0 I_1}{U_1 + Z_0 I_1} \tag{17.12}$$

Loading the input port from an ac source U_0 via a resistor with resistance value Z_0, we obtain the relation

$$U_0 = Z_0 I_1 + U_1 \tag{17.13}$$

Entering this into 17.12, we get

$$s_{11} = \frac{2U_1 - U_0}{U_0} \tag{17.14}$$

For s_{21} we obtain similarly

$$s_{21} = \left(\frac{b_2}{a_1}\right)_{a_2=0} \tag{17.15}$$

$$s_{21} = \frac{U_2 - Z_0 I_2}{U_1 + Z_0 I_1} = \frac{2U_2}{U_0} \tag{17.16}$$

Equations 17.14 and 17.16 now tell us how to measure s_{11} and s_{21}: Measure U_1 at the input port, multiply by 2 using an E source, subtracting U_0 which for simplicity is set to 1, and divide by U_0. At the same time measure U_2 at the output port, multiply by 2 and divide by U_0. Biasing and measuring is done by subcircuit S_PARAM. To obtain s_{22} and s_{12}, you have to exchange the input and output ports of your two-port and do the same measurement again. This is achieved by switching resistors from low ($1m\Omega$) to high ($1T\Omega$) and thus switching the input and output ports.

17.9.3 Usage

Copy and then edit s-param.cir. You will find this file in directory /examples/control_structs of the ngspice distribution.

The reference resistance (often called characteristic impedance) for the measurements is added as a parameter

```
.param Rbase=50
```

The bias voltages at the input and output ports of the circuit are set as parameters as well:

```
.param Vbias_in=1 Vbias_out=2
```

Place your circuit at the appropriate place in the input file, e.g. replacing the existing example circuits. The input port of your circuit has two nodes **in, 0**. The output port has the two nodes

out, 0. The bias voltages are connected to your circuit via the resistances of value **Rbase** at the input and output respectively. This may be of importance for the operating point calculations if your circuit draws a large dc current.

Now edit the ac commands (see 17.5.1) according to the circuit provided, e.g.

```
ac lin 100 2.5MEG 250MEG $ use for Tschebyschef
```

Be careful to keep both ac lines in the .control ... .endc section the same and only change both in equal measure!

Select the plot commands (lin/log, or smith grid) or the 'write to file' commands (write, wrdata, or wrs2p) according to your needs.

Run ngspice in interactive mode

```
ngspice s-param.cir
```

17.10 MISCELLANEOUS (old stuff, has to be checked for relevance)

C-shell type quoting with " and ", and backquote substitution may be used. Within single quotes, no further substitution (like history substitution) is done, and within double quotes, the words are kept together but further substitution is done. Any text between backquotes is replaced by the result of executing the text as a command to the shell.

History substitutions, similar to C-shell history substitutions, are also available - see the C-shell manual page for all of the details. The characters ~, @{, and @} have the same effects as they do in the C-Shell, i.e., home directory and alternative expansion. It is possible to use the wildcard characters *, ?, [, and] also, but only if you unset noglob first. This makes them rather useless for typing algebraic expressions, so you should set noglob again after you are done with wildcard expansion. Note that the pattern [^abc] matchs all characters except a, b, and c.

If X is being used, the cursor may be positioned at any point on the screen when the window is up and characters typed at the keyboard are added to the window at that point. The window may then be sent to a printer using the xpr(1) program.

17.11 Bugs (old stuff, has to be checked for relevance)

When defining aliases like alias pdb plot db('!:1' - '!:2') you must be careful to quote the argument list substitutions in this manner. If you quote the whole argument it might not work properly.

In a user-defined function, the arguments cannot be part of a name that uses the plot.vec syntax. For example: define check(v(1)) cos(tran1.v(1)) does not work.

The @@name[param] notation might not work with trace, iplot, etc. yet.

Chapter 18

Ngspice User Interfaces

ngspice offers a variety of user interfaces. For an overview (several screen shots) please have a look at the ngspice web page.

18.1 MS Windows Graphical User Interface

If compiled properly (e.g. using the –with-windows flag for ./configure under MINGW), ngspice for Windows offers a simple graphical user interface. In fact this interface does not offer much more for data input than a console would offer, e.g. command line inputs, command history and program text output. First of all it applies the Windows api for data plotting. If you run the sample input file given below, you will get an output as shown in fig. 16.1.

Input file:

```
*****Single NMOS Transistor For BSIM3V3.1
general purpose check (Id-Vd) ***
*
*** circuit description ***
m1 2 1 3 0 n1 L=0.6u W=10.0u
vgs 1 0 3.5
vds 2 0 3.5
vss 3 0 0
*
.dc vds 0 3.5 0.05 vgs 0 3.5 0.5
*
.control
run
plot vss#branch
.endc
*
* UCB parameters BSIM3v3.2
.include ../Exam_BSIM3/Modelcards/modelcard.nmos
.include ../Exam_BSIM3/Modelcards/modelcard.pmos
*
.end
```

The GUI consists of an I/O port (lower window) and a graphics window, created by the `plot` command.

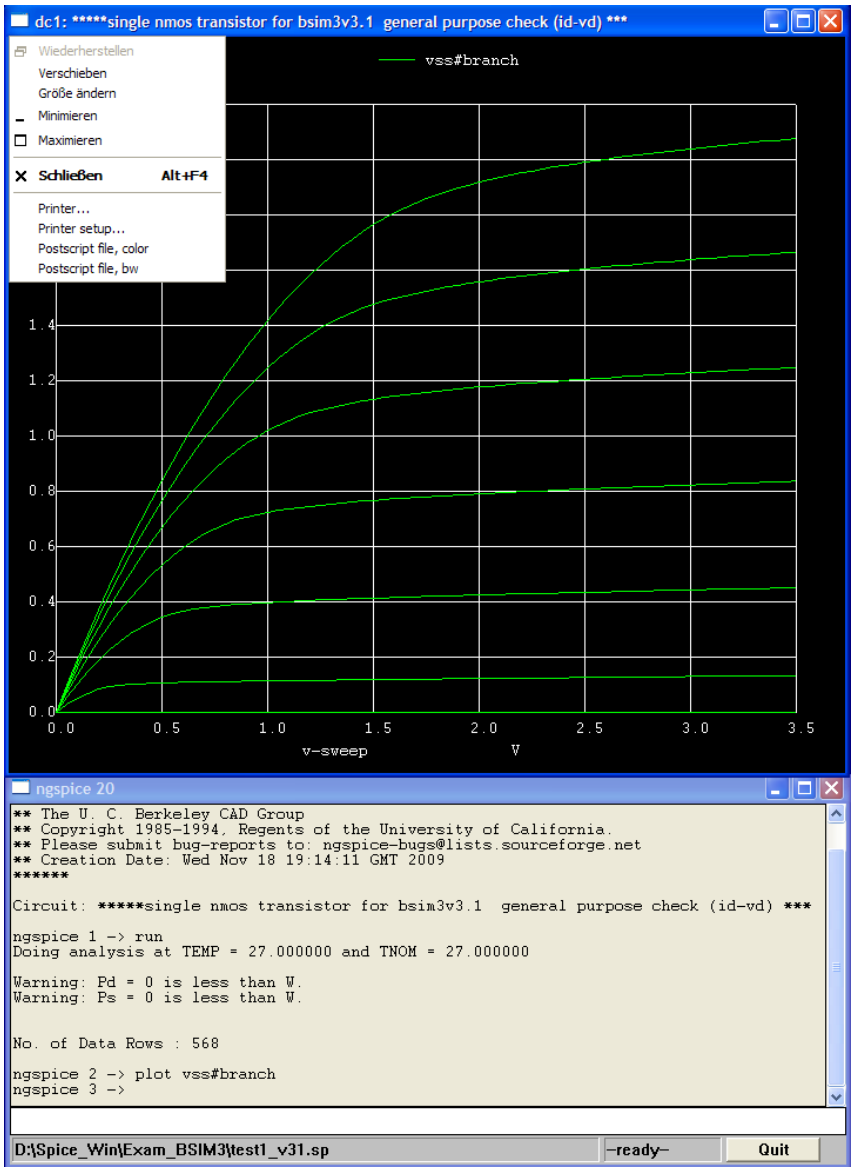

Figure 18.1: MS Windows GUI

The output window displays messages issued by ngspice. You may scroll the window to get more of the text. The input box (white box) may be activated by a mouse click to accept any of the valid ngspice commends. The lower left output bar displays the actual input file. ngspice progress during setup and simulation is shown in the progress window ("–ready–"). The Quit button allow to interrupt ngspice. If ngspice is actively simulating, due to using only a single thread, this interrupt has to wait until the window is accessible from within ngspice, e.g. during an update of the progress window.

In the plot window there is the upper left button, which activated a drop down menu. You may select to print the plot window shown (a very simple printer interface, to be improved), set up any of the printers available on your computer, or issue a postscript file of the actual plot window, either black&white or colored.

Instead of plotting with black background, you may set the background to any other color, preferably to “white” using the command shown below.

Input file modification for white background:

```
.control
run
* white background
set color0=white
* black grid and text (only needed with X11, automatic with MS Win)
set color1=black
* wider grid and plot lines
set xbrushwidth=2
plot vss#branch
.endc
```

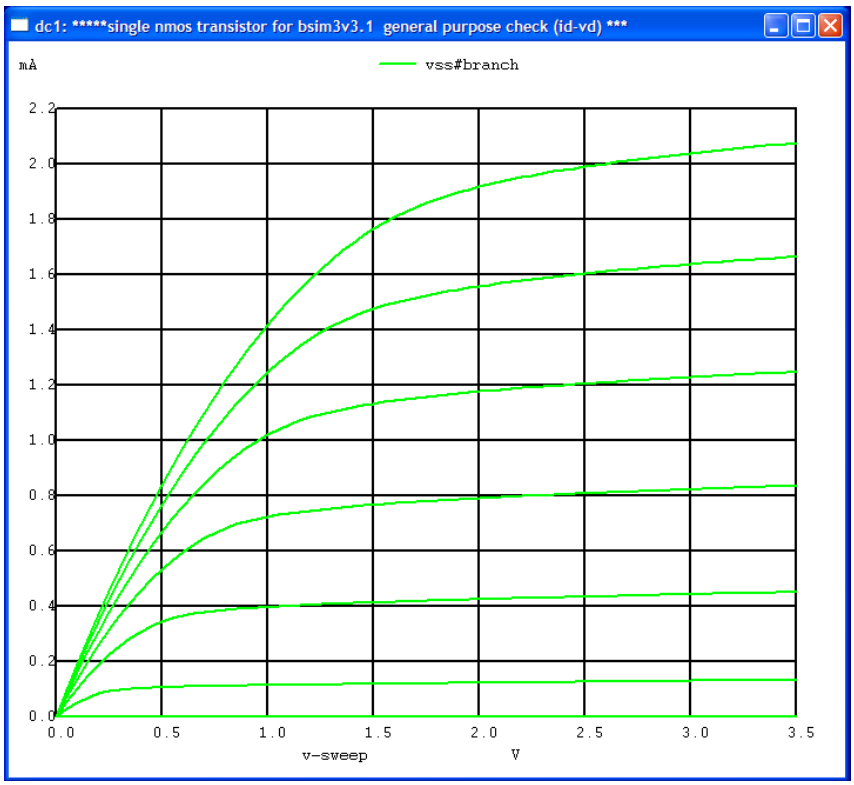

Figure 18.2: Plotting with white background

18.2 MS Windows Console

If the –with-windows flag for ./configure under MINGW is omitted or console_debug or console_release is selected in the MS Visual Studio configuration manager, then ngspice will compile without any internal graphical input or output capability. This may be useful if you apply ngspice in a pipe inside the MSYS window, or use it being called from another program, and just generating output files from a given input. The `plot` (17.5.40) command will not do and leads to an error message.

You still may generate graphics output plots or prints by gnuplot (17.5.25), if installed properly (18.7), or by selecting a suitable printing option (18.6).

18.3 LINUX

If ngspice is compiled with the –with-x flag for ./configure, the standard user interface is a console for input and the X11 graphics system for output with the interactive `plot` (17.5.40) command. For more sophisticated input user interfaces please have a look at chapt. 18.8.

18.4 CygWin

The CygWin interface is similar to the LINUX interface (18.3), i.e. console input and X11 graphics output. To avoid the warning of a missing graphical user interface, you have to start the X11 window manager by issuing the commands

```
$ export DISPLAY=:0.0
$ xwin -multiwindow -clipboard &
```

inside of the CygWin window before starting ngspice.

18.5 Error handling

Error messages and error handling in ngspice have grown over the years, include a lot of "traditional" behaviour und thus are not very systematic and consistent.

Error messages may occur with the token 'Error:'. Often the errors are non-recoverable and will lead to exiting ngspice with error code 1. Sometimes, however, you will get an error message, but ngspice will continue, and may either bail out later because the error has propagated into the simulation, sometimes ngspice will continue, deliver wrong results and exit with error code 0 (no error detected!).

In addition ngspice may issue warning messages like 'Warning: ...'. These should cover recoverable errors only.

So there is still work to be done to define a consistent error messaging, recovery or exiting. A first step is the user defiable variable **strict_errorhandling**. This variable may be set in files spinit (16.5) or .spiceinit (16.6) to immediately stop ngspice, after an error is detected during parsing the circuit. An error message is sent, the ngspice exit code is 1. This behaviour deviates from traditional spice errror handling and thus is introduced as an option only.

XSPICE error messages are explained in chapter 28.

18.6 Postscript printing options

This info is compiled from Roger L. Traylor's web page. All the commands and variables you can set are described in chapt. 17.5. The corresponding input file for the examples given below is listed in chapt. 20.1. Just add the .control section to this file and run in interactive mode by

```
ngspice xspice_c1_print.cir
```

==========

One way is to setup your printing like this:

```
.control
set hcopydevtype=postscript
op
run
plot vcc coll emit
hardcopy temp.ps vcc coll emit
.endc
```

Then print the postscript file temp.ps to a postscript printer.

==========

You can add color traces to it if you wish:

```
.control
set hcopydevtype=postscript
* allow color and set background color if set to value > 0
set hcopypscolor=1
*color0 is background color
*color1 is the grid and text color
*colors 2-15 are for the vectors
set color0=rgb:f/f/f
set color1=rgb:0/0/0
op
run
hardcopy temp.ps vcc coll emit
.endc
```

Then print the postscript file temp.ps to a postscript printer.

==========

You can also direct your output directly to a designated printer (not available in MS Windows):

```
.control
set hcopydevtype=postscript
*send output to the printer kec3112-clr
set hcopydev=kec3112-clr
hardcopy out.tmp vcc coll emit
```

==========

18.7 Gnuplot

Install GnuPlot (on LINUX available from the distribution, on Windows available here). On Windows expand the zip file to a directory of your choice, add the path <any directory>/gnuplot/bin to the PATH variable, and go... The command to invoke Gnuplot (17.5.25) is limited however to x/y plots (no polar etc.).

18.8 Integration with CAD software and "third party" GUIs

In this chapter you will find some links and comments on GUIs for ngspice offered from other projects and on the integration of ngspice into a circuit development flow. The data given rely mostly on information available from the web and thus is out of our control. It also may be far from complete. The GUIs KJWaves and GNUSpiceGUI help you to navigate the commands to need to perform your simulation. XCircuit and the GEDA tools gschem and gnetlist offer integrating schematic capture and simulation.

18.8.1 KJWaves

KJWaves was written to be a cross-platform SPICE tool in pure Java. It aids in viewing, modifying, and simulating SPICE CIRCUIT files. Output from SPICE3 (ngspice) can be read and displayed. Resulting graphs may be printed and saved. The Java executable will run under LINUX and Windows (and maybe other OSs). The development site is available at http://sourceforge.net/projects/kjwaves/. You may find the project home page at http://www.comefly.us/.

18.8.2 GNU Spice GUI

Another GUI, to be found at http://sourceforge.net/projects/gspiceui/.

18.8.3 XCircuit

CYGWIN and especially LINUX users may find XCircuit valuable to establish a development flow including schematic capture and circuit simulation.

18.8.4 GEDA

The gEDA project is developing a full GPL'd suite and toolkit of Electronic Design Automation tools for use with a LINUX. Ngspice may be integrated into the development flow. Two web sites offer tutorials using gschem and gnetlist with ngspice:

http://geda.seul.org/wiki/geda:csygas

http://geda.seul.org/wiki/geda:ngspice_and_gschem

Chapter 19

TCLspice

Spice historically comes as a simulation engine with a Command Line Interface. Spice engine now can be used with friendly Graphical User Interfaces. Tclspice represent a third approach to interfacing ngspice simulation functionality. Tclspice is nothing more than a new way of compiling and using spice source code Spice is no longer considered as a standalone program but as a library invoked by a TCL interpreter. It either permits direct simulation in a friendly TCL shell (this is quite analogous to the command line interface of ngspice), or it permits the elaboration of more complex, more specific, or more user friendly simulation programs, by writing TCL scripts.

19.1 tclspice framework

The technical difference between the ngspice CLI interface and tclspice is that the CLI interface is compiled as a standalone program, whereas tclspice is a shared object. Tclspice is designed to work with tools that expand the capabilities of ngspice: TCL for the scripting and programming language interface and BLT for data processing and display. This two tools give tclspice all of its relevance, with the insurance that the functionality is maintained by competent people.

Making tclspice (see 19.6) produces two files: libspice.so and pkgIndex.tcl. libspice.so is the executable binary that the TCL interpreter calls to handle spice commands. pkgIndex.tcl take place in the TCL directory tree, providing the spice package[1] to the TCL user.

BLT is a TCL package. It is quite well documented. It permits to handle mathematical vector data structure for calculus and display, in a Tk interpreter like wish.

19.2 tclspice documentation

A detailed documentation on tclspice commands is available on the original tclspice web page.

19.3 spicetoblt

Tclspice opens its doors to TCL and BLT with a single specific command spicetoblt.

[1] package has to be understood as the TCL package

TCLspice gets its identity in the command spice::vectoblt This command copies data computed by the simulation engine into a tcl variable. vectoblt is composed of three words: vec, to and blt. Vec means spice vector data. To is the English preposition, and blt is a useful tcl package providing a vector data structure. Example:

```
blt::vector create Iex
spice::vectoblt Vex#branch Iex
```

Here an empty blt vector is created. It is then filled with the vector representation of the current flowing out of source Vex. Vex#branch is native spices syntax. Iex is the name of the BLT vector.

The reverse operation is handled by native spice commands, such as alter, let and set.

19.4 Running TCLspice

TCLspice consists of a library or a package to include in your tcl console or script:

```
load /somepath/libspice.so
package require spice
```

Then you can execute any native spice command by preceding it with spice:: For example if you want to source the testCapa.cir netlist, type the following:

```
spice::source testCapa.cir
spice::spicetoblt example...
```

Plotting data is not a matter of spice, but of tcl. Once the data is stored in a blt vector, it can be plotted. Example:

```
blt::graph .cimvd -title "Cim = f(Vd)"
pack .cimvd
.cimvd element create line1 -xdata Vcmd -ydata Cim
```

With blt::graph a plotting structure is allocated in memory. With pack it is placed into the output window, and becomes visible. The last command, and not the least, plots the function Cim = f(Vcmd), where Cim and Vcmd are two BLT vectors.

19.5 examples

19.5.1 Active capacitor measurement

In this crude implementation of a circuit described by Marc KODRNJA, in his PhD thesis that I found on the Internet. This simulation outputs a graph representing the virtual capacitance versus the command voltage. The function $C = f(V)$ is calculated point by point. For each

control voltage value, the virtual capacitance is calculated with the voltage and intensity across the output port in a frequency simulation. A control value that should be as close to zero as possible is calculated to assess simulation success.

19.5.1.1 Invocation:

This script can be invoked by typing wish testbench1.tcl

19.5.1.2 testbench1.tcl

This line loads the simulator capabilities

```
package require spice
```

This is a comment (Quite useful if you intend to live with other Human beings)

```
# Test of virtual capacitore circuit
# Vary the control voltage and log the resulting capacitance
```

A good example of the calling of a spice command: precede it with spice::

```
spice::source "testCapa.cir"
```

This reminds that any regular TCL command is of course possible

```
set n 30 set dv 0.2
set vmax [expr $dv/2]
set vmin [expr -1 * $dv/2]
set pas [expr $dv/ $n]
```

BLT vector is the structure used to manipulate data. Instantiate the vectors

```
blt::vector create Ctmp
blt::vector create Cim
blt::vector create check
blt::vector create Vcmd
```

Data is, in my coding style, plotted into graph objects. Instantiate the graph

```
blt::graph .cimvd -title "Cim = f(Vd)"
blt::graph .checkvd -title "Rim = f(Vd)"
blt::vector create Iex
blt::vector create freq
blt::graph .freqanal -title "Analyse frequentielle"
#
# First simulation: A simple AC plot
#
set v [expr {$vmin + $n * $pas / 4}]
spice::alter vd = $v
spice::op
spice::ac dec 10 100 100k
```

Retrieve a the intensity of the current across Vex source

```
spice::vectoblt {Vex#branch} Iex
```

Retrieve the frequency at which the current have been assessed

```
spice::vectoblt {frequency} freq
```

Room the graph in the display window

```
pack .freqanal
```

Plot the function Iex =f(V)

```
.freqanal element create line1 -xdata freq -ydata Iex
#
# Second simulation: Capacitance versus voltage control
# for {set i 0} {[expr $n - $i]} {incr i }
#     { set v [expr {$vmin + $i * $pas}]
spice::alter vd = $v
spice::op spice::ac dec 10 100 100k
```

Image capacitance is calculated by spice, instead of TCL there is no objective reason

```
spice::let Cim = real(mean(Vex#branch/(2*Pi*i*frequency*(V(5)-V(6)))))
spice::vectoblt Cim Ctmp
```

Build function vector point by point

```
Cim append $Ctmp(0:end)
```

Build a control vector to check simulation success

```
spice::let err = real(mean(sqrt((Vex#branch-
        (2*Pi*i*frequency*Cim*V(5)-V(6)))^2)))
spice::vectoblt err Ctmp check
append $Ctmp(0:end)
```

Build abscissa vector

```
FALTA ALGO... Vcmd append $v }
```

Plot

```
pack .cimvd
.cimvd element create line1 -xdata Vcmd -ydata Cim
pack .checkvd
.checkvd element create line1 -xdata Vcmd -ydata check
```

19.5.2 Optimization of a linearization circuit for a Thermistor

This example is both the first and the last optimization program I wrote for an electronic circuit. It is far from perfect.

The temperature response of a CTN is exponential. It is thus nonlinear. In a battery charger application floating voltage varies linearly with temperature. A TL431 voltage reference sees its output voltage controlled by two resistors (r10, r12) and a thermistor (r11). The simulation is run at a given temperature. The thermistor is modeled in spice by a regular resistor. Its resistivity is assessed by the TCL script. It is set with a spice::alter command before running the simulation. This script uses an iterative optimization approach to try to converge to a set of two resistor values which minimizes the error between the expected floating voltage and the TL431 output.

19.5.2.1 Invocation:

This script can be executed by the user by simply executing the file in a terminal.

```
./testbench3.tcl
```

Two issues are important to point out[2]:

[2]For those who are really interested in optimizing circuits: Some parameters are very important for quick and correct convergence. The optimizer walks step by step to a local minimum of the cost function you define. Starting from an initial vector YOU provide, it converges step by step. Consider trying another start vector if the result is not the one you expected.

The optimizer will carry on walking until it reaches a vector which resulting cost is smaller than the target cost YOU provide it. You will also provide a maximum iteration count in case the target can not be achieved. Balance your time, specifications, and every other parameters. For a balance between quick and accurate convergence adjust the "factor" variable, at the beginning of minimumSteepestDescent in the file differentiate.tcl.

- During optimization loop, graphical display of the current temperature response is not yet possible and I don't know why. Each time a simulation is performed, some memory is allocated for it.

- The simulation result remains in memory until the libspice library is unloaded (typically: when the tcl script ends) or when a spice::clean command is performed. In this kind of simulation, not cleaning the memory space will freeze your computer and you'll have to restart it. Be aware of that.

19.5.2.2 testbench3.tcl

This calls the shell sh who then runs wish with the file itself.

```
#!/bin/sh
# WishFix \
exec wish "$0" ${1+"$@"}
#
#
#
```

Regular package for simulation

```
package require spice
```

Here the important line is source differentiate.tcl which contains optimization library

```
source differentiate.tcl
```

Generates a temperature vector

```
proc temperatures_calc {temp_inf temp_sup points} {
set tstep [ expr " ( $temp_sup - $temp_inf ) / $points " ]
set t $temp_inf
set temperatures ""
for { set i 0 } { $i < $points } { incr i } {
set t [ expr { $t + $tstep } ]
set temperatures "$temperatures $t"
}
return $temperatures }
```

generates thermistor resistivity as a vector, typically run: thermistance_calc res B [temperatures_calc temp_inf temp_sup points]

```
proc thermistance_calc { res B points } {
set tzero 273.15
set tref 25
set thermistance ""
foreach t $points {
set res_temp [expr " $res * exp ( $B * ( 1 / ($tzero + $t) - 1
   / ( $tzero + $tref ) ) ) " ]
set thermistance "$thermistance $res_temp"
}
return $thermistance }
```

generates the expected floating value as a vector, typically run: tref_calc res B [temperatures_calc temp_inf temp_sup points]

```
proc tref_calc { points } {
set tref ""
foreach t $points {
set tref " $tref [ expr " 6 * (2.275-0.005*($t - 20) ) - 9" ] "
}
return $tref }
```

In the optimization algorithm, this function computes the effective floating voltage at the given temperature.

```
### NOTE:
### As component values are modified by a spice::alter
   Component values can be considered as global variable.
### R10 and R12 are not passed to iteration function because it
    is expected to be correct, ie to have been modified soon
   before proc iteration { t } { set tzero 273.15 spice::alter
   r11 = [ thermistance_calc 10000 3900 $t ]
# Temperature simulation often crashes. Comment it out...
#spice::set temp = [ expr " $tzero + $t " ]
spice::op
spice::vectoblt vref_temp tref_tmp
###NOTE:
###As the library is executed once for the whole script
   execution, it is important to manage the memory
###and regularly destroy unused data set. The data computed
   here will not be reused. Clean it
spice::destroy all return [ tref_tmp range 0 0 ] }
```

This is the cost function optimization algorithm will try to minimize. It is a square norm of the error across the temperature range [-25:75]°C (square norm: norme 2 in french I'm not sure of the English translation)

```
proc cost { r10 r12 } {
tref_blt length 0
spice::alter r10 = $r10
spice::alter r12 = $r12
foreach point [ temperatures_blt range 0 [ expr " [
   temperatures_blt length ] - 1" ] ] {
tref_blt append [ iteration $point ]
}
set result [ blt::vector expr " 1000 * sum(( tref_blt -
   expected_blt )^2 )" ]
disp_curve $r10 $r12
return $result }
```

This function displays the expected and effective value of the voltage, as well as the r10 and r12 resistor values

```
proc disp_curve { r10 r12 } { .g configure -title "Valeurs
   optimales: R10 = $r10 R12 = $r12" }
```

Main loop starts here

```
#
# Optimization
# blt::vector create tref_tmp
blt::vector create tref_blt
blt::vector create expected_blt
blt::vector create temperatures_blt temperatures_blt
append [ temperatures_calc -25 75 30 ] expected_blt
append [ tref_calc [temperatures_blt range 0 [ expr " [
   temperatures_blt length ] - 1" ] ] ]
blt::graph .g
pack .g -side top -fill both -expand true
.g element create real -pixels 4 -xdata temperatures_blt -ydata
    tref_blt
.g element create expected -fill red -pixels 0 -dashes dot -
   xdata temperatures_blt -ydata expected_blt
```

Source the circuit and optimize it, result is retrieved in r10r12 variable and affected to r10 and r12 with a regular expression. A bit ugly.

```
spice::source FB14.cir
set r10r12 [ ::math::optimize::minimumSteepestDescent cost {
   10000 10000 } 0.1 50 ]
regexp {([0-9.]*) ([0-9.]*)} $r10r12 r10r12 r10 r12
```

Outputs optimization result

```
#
# Results
# spice::alter r10 = $r10
spice::alter r12 = $r12
foreach point [ temperatures_blt range 0 [ expr " [
   temperatures_blt length ] - 1" ] ] {
tref_blt append [ iteration $point ]
}
disp_curve $r10 $r12
```

19.5.3 Progressive display

This example is quite simple but it is very interesting. It displays a transient simulation result on the fly. You may now be familiar with most of the lines of this script. It uses the ability of BLT objects to automatically update. When the vector data is modified, the strip-chart display is modified accordingly.

19.5.3.1 testbench2.tcl

```
#!/bin/sh
# WishFix \
  exec wish -f "$0" ${1+"$@"}
###
package require BLT package require spice
```

this avoids to type blt:: before the blt class commands

```
namespace import blt::*
wm title . "Vector Test script"
wm geometry . 800x600+40+40 pack propagate . false
```

A strip chart with labels but without data is created and displayed (packed)

```
stripchart .chart
pack .chart -side top -fill both -expand true
.chart axis configure x -title "Time" spice::source example.cir
spice::bg
run after 1000 vector
create a0 vector
create b0 vectorry
create a1 vector
create b1 vector
create stime
proc bltupdate {} {
puts [spice::spice_data]
spice::spicetoblt a0 a0
spice::spicetoblt b0 b0
spice::spicetoblt a1 a1
spice::spicetoblt b1 b1
spice::spicetoblt time stime
after 100 bltupdate }
bltupdate .chart element create a0 -color red -xdata stime -ydata a0
.chart element create b0 -color blue -xdata stime -ydata b0
.chart element create a1 -color yellow -xdata stime -ydata a1
.chart element create b1 -color black -xdata stime -ydata b1
```

19.6 Compiling

19.6.1 LINUX

Get tcl8.4 from your distribution. You will need the blt plotting package (compatible to the old tcl 8.4 only) from here. See also the actual blt wiki.

```
./configure --with-tcl ..
make
sudo make install
```

19.6.2 MS Windows

Can be done, but is tedious (Windows XP, 32 bit). Not tested on Windows 7.

T.b.d.

Chapter 20

Example Circuits

This section starts with an ngspice example to walk you through the basic features of ngspice using its command line user interface. The operation of ngspice will be illustrated through several examples (chapters 20.1 to 20.7).

The first example uses the simple one-transistor amplifier circuit illustrated in Figure 20.1. This circuit is constructed entirely with ngspice compatible devices and is used to introduce basic concepts, including:

- Invoking the simulator:
- Running simulations in different analysis modes
- Printing and plotting analog results
- Examining status, including execution time and memory usage
- Exiting the simulator

The remainder of the section (from chapter 20.2 onwards) lists several circuits, which have been accompanying any ngspice distribution, and may be regarded as the "classical" SPICE circuits.

20.1 AC coupled transistor amplifier

The circuit shown in Figure 20.1 is a simple one-transistor amplifier. The input signal is amplified with a gain of approximately -(Rc/Re) = -(3.9K/1K) = -3.9. The circuit description file for this example is shown below.

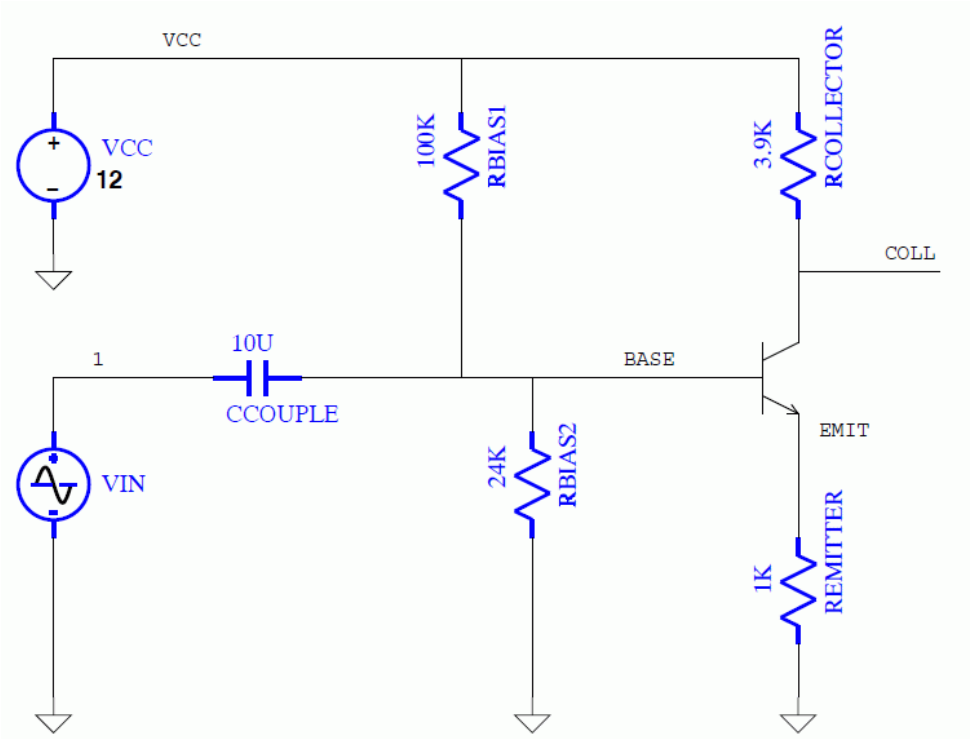

Figure 20.1: Transistor Amplifier Simulation Example

Example:

```
A Berkeley SPICE3 compatible circuit
*
* This circuit contains only Berkeley SPICE3 components.
*
* The circuit is an AC coupled transistor amplifier with
* a sinewave input at node "1", a gain of approximately -3.9,
* and output on node "coll".
*
.tran 1e-5 2e-3
*
vcc vcc 0 12.0
vin 1 0 0.0 ac 1.0 sin(0 1 1k)
ccouple 1 base 10uF
rbias1 vcc base 100k
rbias2 base 0 24k
q1 coll base emit generic
rcollector vcc coll 3.9k
remitter emit 0 1k
*
.model generic npn
*
.end
```

To simulate this circuit, move into a directory under your user account and copy the file `xspice_c1.cir` from directory `/examples/xspice/`.

```
$ cp /examples/xspice/xspice_c1.cir xspice_c1.cir
```

Now invoke the simulator on this circuit as follows:

```
$ ngspice xspice_c1.cir
```

After a few moments, you should see the ngspice prompt:

```
ngspice 1 ->
```

At this point, ngspice has read-in the circuit description and checked it for errors. If any errors had been encountered, messages describing them would have been output to your terminal. Since no messages were printed for this circuit, the syntax of the circuit description was correct.

To see the circuit description read by the simulator you can issue the following command:

```
ngspice 1 -> listing
```

The simulator shows you the circuit description currently in memory:

```
a berkeley spice3 compatible circuit
 1 : a berkeley spice3 compatible circuit
 2 : .global gnd
10 : .tran 1e-5 2e-3
12 : vcc vcc 0 12.0
13 : vin 1 0 0.0 ac 1.0 sin(0 1 1k)
14 : ccouple 1 base 10uf
15 : rbias1 vcc base 100k
16 : rbias2 base 0 24k
17 : q1 coll base emit generic
18 : rcollector vcc coll 3.9k
19 : remitter emit 0 1k
21 : .model generic npn
24 : .end
```

The title of this circuit is “A Berkeley SPICE3 compatible circuit”. The circuit description contains a transient analysis control command `.TRAN 1E-5 2E-3` requesting a total simulated time of 2ms with a maximum time-step of 10us. The remainder of the lines in the circuit description describe the circuit of Figure 20.1.

Now, execute the simulation by entering the “run” command:

```
ngspice 1 -> run
```

The simulator will run the simulation and when execution is completed, will return with the ngspice prompt. When the prompt returns, issue the rusage command again to see how much time and memory has been used now.

To examine the results of this transient analysis, we can use the “plot” command. First we will plot the nodes labeled “1” and “base”.

```
ngspice 2 -> plot v(1) base
```

The simulator responds by displaying an X Window System plot similar to that shown in Figure 20.2.

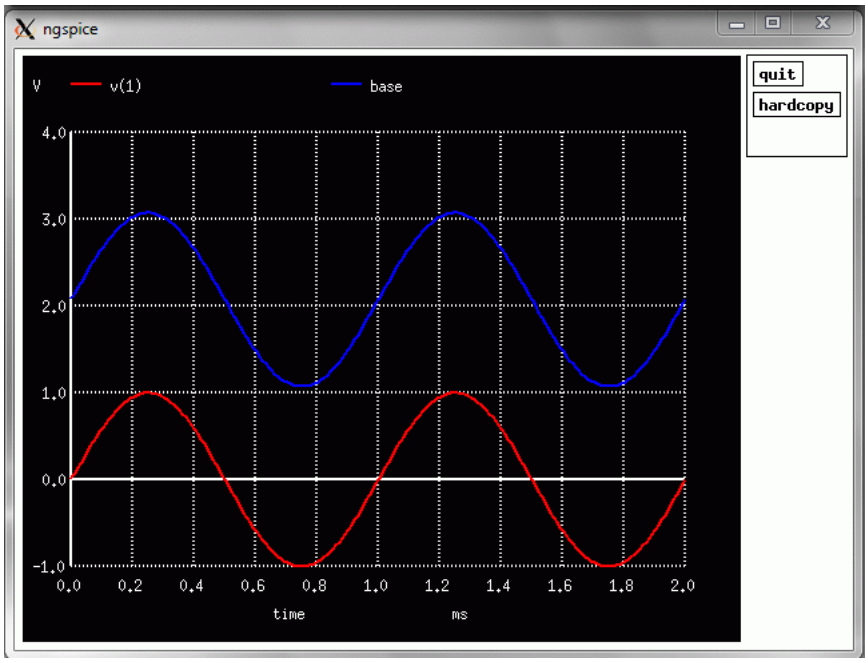

Figure 20.2: node 1 and node ’base’ versus time

Notice that we have named one of the nodes in the *circuit description* with a number (“1”), while the others are words (“base”). This was done to illustrate ngspice’s special requirements for plotting nodes labeled with numbers. Numeric labels are allowed in ngspice for backwards compatibility with SPICE2. However, they require special treatment in some commands such as “plot”. The “plot” command is designed to allow expressions in its argument list in addition to names of results data to be plotted. For example, the expression `plot (base - 1)` would plot the result of subtracting 1 from the value of node “base”.

If we had desired to plot the difference between the voltage at node “base” and node “1”, we would need to enclose the node name “1” in the construction v( ) producing a command such as `plot (base - v(1))`.

Now, issue the following command to examine the voltages on two of the internal nodes of the transistor amplifier circuit:

```
ngspice 3 -> plot vcc coll emit
```

The plot shown in Figure 20.3 should appear. Notice in the circuit description that the power supply voltage source and the node it is connected to both have the name "vcc". The plot

command above has plotted the node voltage "vcc". However, it is also possible to plot branch currents through voltage sources in a circuit. ngspice always adds the special suffix "#branch" to voltage source names. Hence, to plot the current into the voltage source named "vcc", we would use a command such as plot vcc#branch.

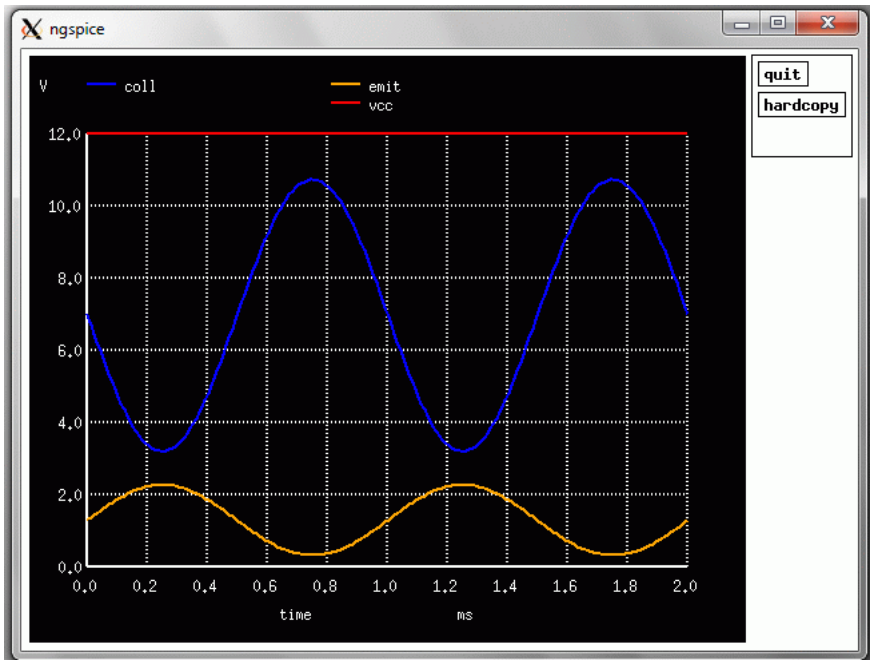

Figure 20.3: VCC, Collector and Emitter Voltages

Now let's run a simple DC simulation of this circuit and examine the bias voltages with the "print" command. One way to do this is to quit the simulator using the "quit" command, edit the input file to change the ".tran" line to ".op" (for 'operating point analysis'), re-invoke the simulator, and then issue the "run" command. However, ngspice allows analysis mode changes directly from the ngspice prompt. All that is required is to enter the control line, e.g. op (without the leading "."). ngspice will interpret the information on the line and start the new analysis run immediately, without the need to enter a new "run" command.

To run the DC simulation of the transistor amplifier, issue the following command:

```
ngspice 4 -> op
```

After a moment the ngspice prompt returns. Now issue the "print" command to examine the emitter, base, and collector DC bias voltages.

```
ngspice 5 -> print emit base coll
```

ngspice responds with:

```
emit = 1.293993e+00 base = 2.074610e+00 coll = 7.003393e+00
```

To run an AC analysis, enter the following command:

```
ngspice 6 -> ac dec 10 0.01 100
```

This command runs a small-signal swept AC analysis of the circuit to compute the magnitude and phase responses. In this example, the sweep is logarithmic with "decade" scaling, 10 points per decade, and lower and upper frequencies of 0.01 Hz and 100 Hz. Since the command sweeps through a range of frequencies, the results are vectors of values and are examined with the plot command. Issue to the following command to plot the response curve at node "coll":

```
ngspice 7 -> plot coll
```

This plot shows the AC gain from input to the collector. (Note that our input source in the circuit description "vin" contained parameters of the form "AC 1.0" designating that a unit-amplitude AC signal was applied at this point.)

To produce a more traditional "Bode" gain phase plot with logarithmic scaling on the frequency axis, we use the expression capability of the "plot" command and the built-in Nutmeg functions db( ), log( ), and ph( ) together with the vs keyword:

```
ngspice 8 -> plot db(coll) ph(coll) vs log(frequency)
```

The last analysis supported by ngspice is a swept DC analysis. To perform this analysis, issue the following command:

```
ngspice 9 -> dc vcc 0 15 0.1
```

This command sweeps the supply voltage "vcc" from 0 to 15 volts in 0.1 volt increments. To plot the results, issue the command:

```
ngspice 10 -> plot emit base coll
```

Finally, to exit the simulator, use the "quit" command, and you will be returned to the operating system prompt.

```
ngspice 11 -> quit
```

So long.

20.2 Differential Pair

The following deck determines the dc operating point of a simple differential pair. In addition, the ac small-signal response is computed over the frequency range 1Hz to 100MEGHz.

Example:

```
SIMPLE DIFFERENTIAL PAIR
VCC 7 0 12
VEE 8 0 -12
VIN 1 0 AC 1
RS1 1 2 1K
RS2 6 0 1K
Q1 3 2 4 MOD1
Q2 5 6 4 MOD1
RC1 7 3 10K
RC2 7 5 10K
RE 4 8 10K
.MODEL MOD1 NPN BF=50 VAF=50 IS=1.E-12 RB=100 CJC=.5PF TF=.6NS
.TF V(5) VIN
.AC DEC 10 1 100MEG
.END
```

20.3 MOSFET Characterization

The following deck computes the output characteristics of a MOSFET device over the range 0-10V for VDS and 0-5V for VGS.

Example:

```
MOS OUTPUT CHARACTERISTICS
.OPTIONS NODE NOPAGE
VDS 3 0
VGS 2 0
M1 1 2 0 0 MOD1 L=4U W=6U AD=10P AS=10P
* VIDS MEASURES ID, WE COULD HAVE USED VDS, BUT ID WOULD BE NEGATIVE
VIDS 3 1
.MODEL MOD1 NMOS VTO=-2 NSUB=1.0E15 UO=550
.DC VDS 0 10 .5 VGS 0 5 1
.END
```

20.4 RTL Inverter

The following deck determines the dc transfer curve and the transient pulse response of a simple RTL inverter. The input is a pulse from 0 to 5 Volts with delay, rise, and fall times of 2ns and a pulse width of 30ns. The transient interval is 0 to 100ns, with printing to be done every nanosecond.

Example:

```
SIMPLE RTL INVERTER
VCC 4 0 5
VIN 1 0 PULSE 0 5 2NS 2NS 2NS 30NS
RB 1 2 10K
Q1 3 2 0 Q1
RC 3 4 1K
.MODEL Q1 NPN BF 20 RB 100 TF .1NS CJC 2PF
.DC VIN 0 5 0.1
.TRAN 1NS 100NS
.END
```

20.5 Four-Bit Binary Adder (Bipolar)

The following deck simulates a four-bit binary adder, using several subcircuits to describe various pieces of the overall circuit.

Example:

```
ADDER - 4 BIT ALL-NAND-GATE BINARY ADDER
*** SUBCIRCUIT DEFINITIONS
.SUBCKT NAND 1 2 3 4
* NODES: INPUT(2), OUTPUT, VCC
Q1 9 5 1 QMOD
D1CLAMP 0 1 DMOD
Q2 9 5 2 QMOD
D2CLAMP 0 2 DMOD
RB 4 5 4K
R1 4 6 1.6K
Q3 6 9 8 QMOD
R2 8 0 1K
RC 4 7 130
Q4 7 6 10 QMOD
DVBEDROP 10 3 DMOD
Q5 3 8 0 QMOD
.ENDS NAND
```

Continue 4 Bit adder :

```
.SUBCKT ONEBIT 1 2 3 4 5 6
* NODES: INPUT(2), CARRY-IN, OUTPUT, CARRY-OUT, VCC
X1 1 2 7 6 NAND
X2 1 7 8 6 NAND
X3 2 7 9 6 NAND
X4 8 9 10 6 NAND
X5 3 10 11 6 NAND
X6 3 11 12 6 NAND
X7 10 11 13 6 NAND
X8 12 13 4 6 NAND
X9 11 7 5 6 NAND
.ENDS ONEBIT

.SUBCKT TWOBIT 1 2 3 4 5 6 7 8 9
* NODES: INPUT - BIT0(2) / BIT1(2), OUTPUT - BIT0 / BIT1,
* CARRY-IN, CARRY-OUT, VCC
X1 1 2 7 5 10 9 ONEBIT
X2 3 4 10 6 8 9 ONEBIT
.ENDS TWOBIT

.SUBCKT FOURBIT 1 2 3 4 5 6 7 8 9 10 11 12 13 14 15
* NODES: INPUT - BIT0(2) / BIT1(2) / BIT2(2) / BIT3(2),
* OUTPUT - BIT0 / BIT1 / BIT2 / BIT3, CARRY-IN, CARRY-OUT, VCC
X1 1 2 3 4 9 10 13 16 15 TWOBIT
X2 5 6 7 8 11 12 16 14 15 TWOBIT
.ENDS FOURBIT

*** DEFINE NOMINAL CIRCUIT
.MODEL DMOD D
.MODEL QMOD NPN(BF=75 RB=100 CJE=1PF CJC=3PF)
VCC 99 0 DC 5V
VIN1A 1 0 PULSE(0 3 0 10NS 10NS 10NS 50NS)
VIN1B 2 0 PULSE(0 3 0 10NS 10NS 20NS 100NS)
VIN2A 3 0 PULSE(0 3 0 10NS 10NS 40NS 200NS)
VIN2B 4 0 PULSE(0 3 0 10NS 10NS 80NS 400NS)
VIN3A 5 0 PULSE(0 3 0 10NS 10NS 160NS 800NS)
VIN3B 6 0 PULSE(0 3 0 10NS 10NS 320NS 1600NS)
VIN4A 7 0 PULSE(0 3 0 10NS 10NS 640NS 3200NS)
VIN4B 8 0 PULSE(0 3 0 10NS 10NS 1280NS 6400NS)
X1 1 2 3 4 5 6 7 8 9 10 11 12 0 13 99 FOURBIT
RBIT0 9 0 1K
RBIT1 10 0 1K
RBIT2 11 0 1K
RBIT3 12 0 1K
RCOUT 13 0 1K

*** (FOR THOSE WITH MONEY (AND MEMORY) TO BURN)
.TRAN 1NS 6400NS
.END
```

20.6 Four-Bit Binary Adder (MOS)

The following deck simulates a four-bit binary adder, using several subcircuits to describe various pieces of the overall circuit.

Example:

```
  ADDER - 4 BIT ALL-NAND-GATE BINARY ADDER
*** SUBCIRCUIT DEFINITIONS
.SUBCKT NAND in1 in2 out VDD
* NODES:  INPUT(2), OUTPUT, VCC
M1 out in2 Vdd Vdd p1 W=3u L=1u
M2 net.1 in2 0 0 n1 W=3u L=2u
M3 out in1 Vdd Vdd p1 W=3u L=1u
M4 out in1 net.1 0 n1 W=3u L=2u
.ENDS NAND
.SUBCKT ONEBIT 1 2 3 4 5 6 AND
X2    1   7   8   6    NAND
X3    2   7   9   6    NAND
X4    8   9  10   6    NAND
X5    3  10  11   6    NAND
X6    3  11  12   6    NAND
X7   10  11  13   6    NAND
X8   12  13   4   6    NAND
X9   11   7   5   6    NAND
.ENDS ONEBIT
.SUBCKT TWOBIT 1 2 3 4 5 6 7 8 9
* NODES:  INPUT - BIT0(2) / BIT1(2), OUTPUT - BIT0 / BIT1,
*          CARRY-IN, CARRY-OUT, VCC
X1    1   2   7   5  10   9    ONEBIT
X2    3   4  10   6   8   9    ONEBIT
.ENDS TWOBIT
.SUBCKT FOURBIT 1 2 3 4 5 6 7 8 9 10 11 12 13 14 15
*NODES: INPUT - BIT0(2) / BIT1(2) / BIT2(2) / BIT3(2),
*        OUTPUT - BIT0 / BIT1 / BIT2 / BIT3, CARRY-IN,
*        CARRY-OUT, VCC
X1    1   2   3   4   9  10  13  16  15    TWOBIT
X2    5   6   7   8  11  12  16  14  15    TWOBIT
.ENDS FOURBIT
```

Continue 4 Bit adder MOS:

```
*** DEFINE NOMINAL CIRCUIT
VCC     99   0    DC 3.3V
VIN1A    1   0    PULSE(0 3 0 10NS 10NS    10NS    50NS)
VIN1B    2   0    PULSE(0 3 0 10NS 10NS    20NS   100NS)
VIN2A    3   0    PULSE(0 3 0 10NS 10NS    40NS   200NS)
VIN2B    4   0    PULSE(0 3 0 10NS 10NS    80NS   400NS)
VIN3A    5   0    PULSE(0 3 0 10NS 10NS   160NS   800NS)
VIN3B    6   0    PULSE(0 3 0 10NS 10NS   320NS  1600NS)
VIN4A    7   0    PULSE(0 3 0 10NS 10NS   640NS  3200NS)
VIN4B    8   0    PULSE(0 3 0 10NS 10NS  1280NS  6400NS)
X1       1   2   3   4   5   6   7   8   9 10 11 12   0 13 99 FOURBIT
.option acct
.TRAN 1NS 1000NS
*.save VIN1A VIN1B VIN2A VIN2B VIN3A VIN3B VIN4A VIN4B
*.save V(1) V(2) V(3) V(4) V(5) V(6) V(7) V(8)

.include ./Modelcards/modelcard.nmos
.include ./Modelcards/modelcard.pmos

.END
```

20.7 Transmission-Line Inverter

The following deck simulates a transmission-line inverter. Two transmission-line elements are required since two propagation modes are excited. In the case of a coaxial line, the first line (T1) models the inner conductor with respect to the shield, and the second line (T2) models the shield with respect to the outside world.

Example:

```
TRANSMISSION–LINE INVERTER
V1 1 0 PULSE(0 1 0 0.1N)
R1 1 2 50
X1 2 0 0 4 TLINE
R2 4 0 50
.SUBCKT TLINE 1 2 3 4
T1 1 2 3 4 Z0=50 TD=1.5NS
T2 2 0 4 0 Z0=100 TD=1NS
.ENDS TLINE
.TRAN 0.1NS 20NS
.END
```

Chapter 21

Statistical circuit analysis

21.1 Introduction

Real circuits do not operate in a world with fixed values of device parameters, power supplies and environmental data. Even if a ngspice output offers 5 digits or more of precision, this should not mislead you thinking that your circuits will behave exactly the same. All physical parameters influencing a circuit (e.g. MOS Source/drain resistance, threshold voltage, transconductance) are distributed parameters, often following a Gaussian distribution with a mean value $\mu$and a standard deviation σ.

To obtain circuits operating reliably under varying parameters, it might be necessary to simulate them taking certain parameter spreads into account. ngspice offers several methods supporting this task. A powerful random number generator is working in the background. Its seed value is derived from the process id upon start-up of ngspice. If you need reproducible random numbers, you may start ngspice setting the command `set rndseed=<int value>` into spinit or .spiceinit. The following three chapters offer a short introduction to the statistical methods available in ngspice. The diversity of approaches stems from historical reasons, and from some efforts to make ngspice compatible to other simulators.

21.2 Using random param(eters)

The ngspice frontend (with its 'numparam' parser) contains the .param (see chapt. 2.8.1) and .func (see chapt. 2.9) commands. Among the built-in functions supported (see 2.8.5) you will find the following statistical functions:

Built-in function	Notes
gauss(nom, rvar, sigma)	nominal value plus variation drawn from Gaussian distribution with mean 0 and standard deviation rvar (relative to nominal), divided by sigma
agauss(nom, avar, sigma)	nominal value plus variation drawn from Gaussian distribution with mean 0 and standard deviation avar (absolute), divided by sigma
unif(nom, rvar)	nominal value plus relative variation (to nominal) uniformly distributed between +/-rvar
aunif(nom, avar)	nominal value plus absolute variation uniformly distributed between +/-avar
limit(nom, avar)	nominal value +/-avar, depending on random number in [-1, 1[being > 0 or < 0

The frontend parser evaluates all `.param` or `.func` statements upon start-up of ngspice, before the circuit is evaluated. The parameters aga, aga2, lim obtain their numerical values once. If the random function appears in a device card (e.g. `v11 11 0 'agauss(1,2,3)'`), a new random number is generated.

Random number example using parameters:

```
* random number tests
.param aga = agauss(1,2,3)
.param aga2='2*aga'
.param lim=limit(0,1.2)
.func rgauss(a,b,c) '5*agauss(a,b,c)'
* always same value as defined above
v1 1 0  'lim'
v2 2 0  'lim'
* may be a different value
v3 3 0  'limit(0,1.2)'
* always new random values
v11 11 0 'agauss(1,2,3)'
v12 12 0 'agauss(1,2,3)'
v13 13 0 'agauss(1,2,3)'
* same value as defined above
v14 14 0 'aga'
v15 15 0 'aga'
v16 16 0 'aga2'
* using .func, new random values
v17 17 0 'rgauss(0,2,3)'
v18 18 0 'rgauss(0,2,3)'
.op
.control
run
print v(1) v(2) v(3) v(11) v(12) v(13)
print v(14) v(15) v(16) v(17) v(18)
.endc
.end
```

So v1, v2, and v3 will get the same value, whereas v4 might differ. v11, v12, and v13 will get different values, v14, v15, and v16 will obtain the values set above in the .param statements. `.func` will start its replacement algorithm, `rgauss(a,b,c)` will be replaced everywhere by `5*agauss(a,b,c)`.

Thus device and model parameters may obtain statistically distributed starting values. You simply set a model parameter not to a fixed numerical value, but insert a 'parameter' instead, which may consist of a token defined in a `.param` card, by calling `.func` or by using a built-in function, including the statistical functions described above. The parameter values will be evaluated once immediately after reading the input file.

21.3 Behavioral sources (B, E, G, R, L, C) with random control

All sources listed in the section header may contain parameters, which will be evaluated **before** simulation starts, as described in the previous section (21.2). In addition the nonlinear voltage or current sources (B-source, 5) as well as their derivatives E and G, but also the behavioral R, L, and C may be controlled **during** simulation by a random independent voltage source V with TRRANDOM option (chapt. 4.1.8).

An example circuit, a Wien bridge oscillator from input file `/examples/Monte_Carlo/OpWien.sp` is distributed with ngspice or available at CVS. The two frequency determining pairs of R and C are varied statistically using four independent Gaussian voltage sources as the controlling units. An excerpt of this command sequence is shown below. The total simulation time `ttime` is divided into 100 equally spaced blocks. Each block will get a new set of control voltages, e.g. `VR2`, which is Gaussian distributed, mean 0 and absolute deviation 1. The resistor value is calculated with ±10% spread, the factor 0.033 will set this 10% to be a deviation of 1 sigma from nominal value.

Examples for control of a behavioral resistor:

```
* random resistor
.param res = 10k
.param ttime=12000m
.param varia=100
.param ttime10 = 'ttime/varia'
* random control voltage (Gaussian distribution)
VR2 r2  0 dc 0 trrandom (2 'ttime10' 0 1)
* behavioral resistor
R2 4 6  R = 'res + 0.033 * res*V(r2)'
```

So within a single simulation run you will obtain 100 different frequency values issued by the Wien bridge oscillator. The voltage sequence VR2 is shown below.

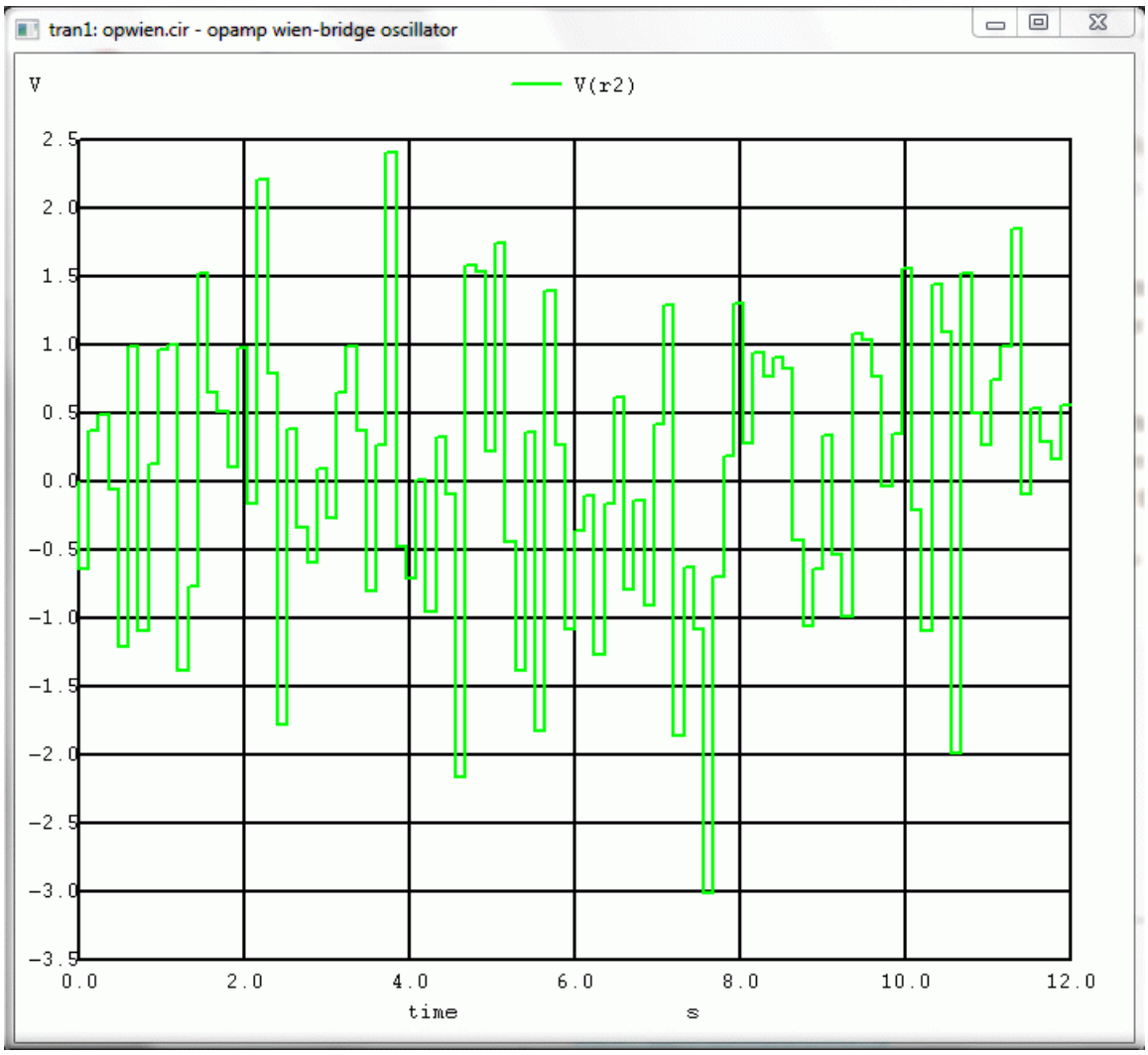

21.4 ngspice scripting language

The ngspice scripting language is described in detail in chapter 17.8. All commands listed in chapter 17.5 are available, as well as the built-in functions decried in chapter 17.2, the control structures listed in chapter 17.6, and the predefined variables from chapt. 17.7. Variables and functions are typically evaluated after a simulation run. You may created loops with several simulation runs and change device and model parameters with the **alter** (17.5.3) or **altermod** (17.5.4) commands, as shown in the next section 21.5. You may even interrupt a simulation run by proper usage of the **stop** (17.5.66) and **resume** (17.5.47) commands. After stop you may change device or model parameters and then go on with resume, continuing the simulation with the new parameter values.

The statistical functions provided for scripting are listed in the following table:

Name	Function
rnd(vector)	A vector with each component a random integer between 0 and the absolute value of the input vector's corresponding integer element value.
sgauss(vector)	Returns a vector of random numbers drawn from a Gaussian distribution (real value, mean = 0 , standard deviation = 1). The length of the vector returned is determined by the input vector. The contents of the input vector will not be used. A call to sgauss(0) will return a single value of a random number as a vector of length 1..
sunif(vector)	Returns a vector of random real numbers uniformly distributed in the interval [-1 .. 1[. The length of the vector returned is determined by the input vector. The contents of the input vector will not be used. A call to sunif(0) will return a single value of a random number as a vector of length 1.
poisson(vector)	Returns a vector with its elements being integers drawn from a Poisson distribution. The elements of the input vector (real numbers) are the expected numbers λ. Complex vectors are allowed, real and imaginary values are treated separately.
exponential(vector)	Returns a vector with its elements (real numbers) drawn from an exponential distribution. The elements of the input vector are the respective mean values (real numbers). Complex vectors are allowed, real and imaginary values are treated separately.

21.5 Monte-Carlo Simulation

The ngspice scripting language may be used to run Monte-Carlo simulations with statistically varying device or model parameters. Calls to the functions sgauss(0) or sunif(0) (see 17.2) will return Gaussian or uniform distributed random numbers (real numbers), stored in a vector. You may define (see 17.5.13) your own function using sgauss or sunif, e.g. to change the mean or range. In a loop (see 17.6) then you may call the alter (17.5.3) or altermod (17.5.4) statements with random parameters followed by an analysis like op, dc, ac, tran or other.

21.5.1 Example 1

The first examples is a LC band pass filter, where L and C device parameters will be changed 100 times. Each change is followed by an ac analysis. All graphs of output voltage versus frequency are plotted. The file is available in the distribution as /examples/Monte_Carlo/MonteCarlo.sp as well as from the CVS repository.

Monte-Carlo example 1

```
Perform Monte Carlo simulation in ngspice
V1 N001 0 AC 1 DC 0
R1 N002 N001 141
*
C1 OUT 0 1e-09
L1 OUT 0 10e-06
C2 N002 0 1e-09
L2 N002 0 10e-06
L3 N003 N002 40e-06
C3 OUT N003 250e-12
*
R2 0 OUT 141
*
.control
  let mc_runs = 100
  let run = 1
  set curplot = new        $ create a new plot
  set scratch = $curplot   $ store its name to 'scratch'
*
  define unif(nom, var) (nom + nom*var * sunif(0))
  define aunif(nom, avar) (nom + avar * sunif(0))
  define gauss(nom, var, sig) (nom + nom*var/sig * sgauss(0))
  define agauss(nom, avar, sig) (nom + avar/sig * sgauss(0))
*
  dowhile run <= mc_runs
*    alter c1 = unif(1e-09, 0.1)
*    alter l1 = aunif(10e-06, 2e-06)
*    alter c2 = aunif(1e-09, 100e-12)
*    alter l2 = unif(10e-06, 0.2)
*    alter l3 = aunif(40e-06, 8e-06)
*    alter c3 = unif(250e-12, 0.15)
    alter c1 = gauss(1e-09, 0.1, 3)
    alter l1 = agauss(10e-06, 2e-06, 3)
    alter c2 = agauss(1e-09, 100e-12, 3)
    alter l2 = gauss(10e-06, 0.2, 3)
    alter l3 = agauss(40e-06, 8e-06, 3)
    alter c3 = gauss(250e-12, 0.15, 3)
    ac oct 100 250K 10Meg
    set run ="$&run"      $ create a variable from the vector
    set dt = $curplot     $ store the current plot to dt
    setplot $scratch      $ make 'scratch' the active plot
* store the output vector to plot 'scratch'
    let vout{$run}={$dt}.v(out)
    setplot $dt           $ go back to the previous plot
    let run = run + 1
  end
  plot db({$scratch}.all)
.endc

.end
```

21.5.2 Example 2

A more sophisticated input file for Monte Carlo simulation is distributed with the file /examples/Monte_Carlo/MCring.sp (or CVS repository). Due to its length it is not reproduced here, but some comments on its enhancements over example 1 (21.5.1) are presented in the following.

A 25-stage ring oscillator is the circuit used with a transient simulation. It comprises of CMOS inverters, modeled with BSIM3. Several model parameters (vth, u0, tox, L, and W) shall be varied statistically between each simulation run. The frequency of oscillation will be measured by a fft and stored. Finally a histogram of all measured frequencies will be plotted.

The function calls to `sunif(0)` and `sgauss(0)` return uniformly or Gaussian distributed random numbers. A function `unif`, defined by the line

```
define unif(nom, var) (nom + (nom*var) * sunif(0))
```

will return a value with mean `nom` and deviation `var` relative to `nom`.

The line

```
set n1vth0=@n1[vth0]
```

will store the threshold voltage vth0, given by the model parameter set, into a variable `n1vth0`, ready to be used by `unif`, `aunif`, `gauss`, or `agauss` function calls.

In the simulation loop the altermod command changes the model parameters before a call to tran. After the transient simulation the resulting vector is linearized, a fft is calculated, and the maximum of the fft signal is measured by the `meas` command and stored in a vector maxffts. Finally the contents of the vector maxffts is plotted in a histogram.

For more details, please have a look at the strongly commented input file MCring.sp.

21.6 Data evaluation with Gnuplot

Run the example file /examples/Monte_Carlo/OpWien.sp, described in chapt. 21.3. Generate a plot with Gnuplot by the ngspice command

```
gnuplot pl4mag v4mag xlimit 500 1500
```

Open and run the command file in the Gnuplot command line window by

```
load 'pl-v4mag.p'
```

A Gaussian curve will be fitted to the simulation data. The mean oscillator frequency and its deviation are printed in the curve fitting log in the Gnuplot window.

Gnuplot script for data evaluation:

```
# This file: pl-v4mag.p
# ngspice file OpWien.sp
# ngspice command:
# gnuplot pl4mag v4mag xlimit 500 1500
# a gnuplot manual:
# http://www.duke.edu/~hpgavin/gnuplot.html

# Gauss function to be fitted
f1(x)=(c1/(a1*sqrt(2*3.14159))*exp(-((x-b1)**2)/(2*a1**2)))
# Gauss function to plot start graph
f2(x)=(c2/(a2*sqrt(2*3.14159))*exp(-((x-b2)**2)/(2*a2**2)))
# start values
a1=50 ; b1=900 ; c1=50
# keep start values in  a2, b2, c2
a2=a1 ; b2=b1 ; c2=c1
# curve fitting
fit f1(x) 'pl4mag.data' using 1:2 via a1, b1, c1
# plot original and fitted curves with new a1, b1, c1
plot "pl4mag.data" using 1:2 with lines, f1(x), f2(x)
```

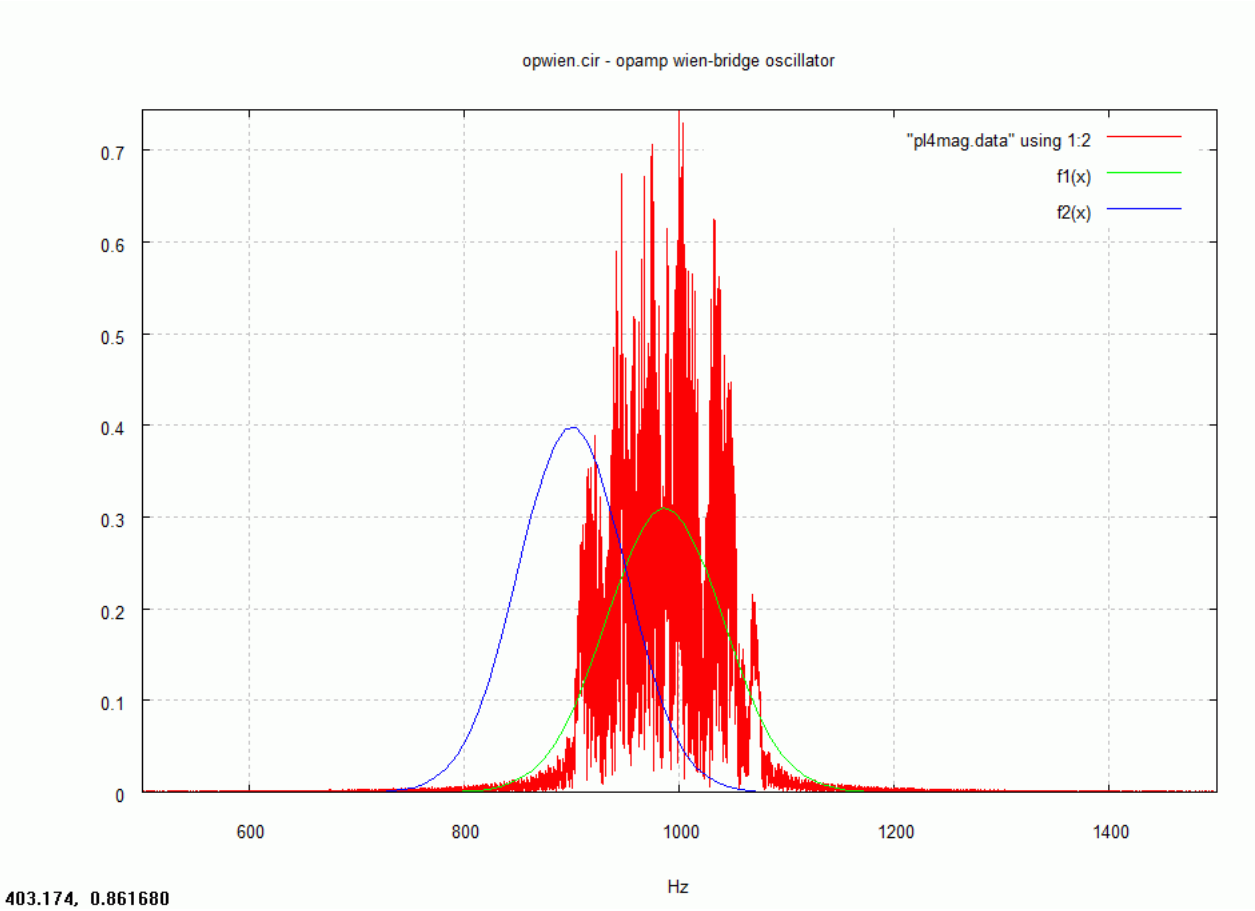

pl4mag.data is the simulation data, f2(x) the starting curve, f1(x) the fitted Gaussian distribution.

This is just a simple example. You might explore the powerful built-in functions of Gnuplot to do a much more sophisticated statistical data analysis.

Chapter 22

Circuit optimization with ngspice

22.1 Optimization of a circuit

Your circuit design (analog, maybe mixed-signal) has already the best circuit topology. There might be still some room for parameter selection, e.g. the geometries of transistors or values of passive elements, to best fit the specific purpose. This is, what (automatic) circuit optimization will deliver. In addition you may fine-tune, optimize and verify the circuit over voltage, process or temperature corners. So circuit optimization is a valuable tool in the hands of an experienced designer. It will relieve you from the routine task of 'endless' repetitions of re-simulating your design.

You have to choose circuit variables as parameters to be varied during optimization (e.g. device size, component values, bias inputs etc.). Then you may pose performance constraints onto you circuits (e.g. Vnode < 1.2V, gain > 50 etc.). Optimization objectives are the variables to be minimized or maximized. The n objectives and m constraints are assembled into a cost function.

The optimization flow is now the following: The circuit is loaded. Several (perhaps only one) simulations are started with a suitable starter set of variables. Measurements are done on the simulator output to check for the performance constraints and optimization objectives. These data are fed into the optimizer to evaluate the cost function. A sophisticated algorithm now determines a new set of circuit variables for the next simulator run(s). Stop conditions have to be defined by the user to tell the simulator when to finish (e.g. fall below a cost function value, parameter changes fall below a certain threshold, number of iterations exceeded).

The optimizer algorithms, its parameters and the starting point influence the convergence behavior. The algorithms have to provide measures to reaching the global optimum, not to stick to a local one, and thus are tantamount for the quality of the optimizer.

ngspice does not have an integral optimization processor. Thus this chapter will rely on work done by third parties to introduce ngspice optimization capability.ngspice provides the simulation engine, a script or program controls the simulator and provides the optimizer functionality.

Four optimizers are presented here, using ngspice scripting language, using tclspice, using a Python script, and using ASCO, a c-coded optimization program.

22.2 ngspice optimizer using ngspice scripts

Friedrich Schmidt (see his web site) has intensively used circuit optimization during his development of Nonlinear loadflow computation with Spice based simulators. He has provided an optimizer using the internal ngspice scripting language (see chapt. 17.8). His original scripts are found here. A slightly modified and concentrated set of his scripts is available from the ngspice optimizer directory.

The simple example given in the scripts is o.k. with current ngspice. Real circuits have still to be tested.

22.3 ngspice optimizer using tclspice

ngspice offers another scripting capability, namely the tcl/tk based tclspice option (see chapt. 19). An optimization procedure may be written using a tcl script. An example is provided in chapter 19.5.2.

22.4 ngspice optimizer using a Python script

Werner Hoch has developed a ngspice optimization procedure based on the 'differential evolution' algorithm [21]. On his web page he provides a Python script containing the control flow and algorithms.

22.5 ngspice optimizer using ASCO

The ASCO optimizer, developed by Joao Ramos, also applies the 'differential evolution' algorithm [21]. An enhanced version 0.4.7.1, adding ngspice as a simulation engine, may be downloaded here (7z archive format). Included are executable files (asco, asco-mpi, ngspice-c for MS Windows). The source code should also compile and function under LINUX (not yet tested).

ASCO is a standalone executable, which communicates with ngspice via ngspice input and output files. Several optimization examples, originally provided by J. Ramos for other simulators, are prepared for use with ngspice. Parallel processing on a multi-core computer has been tested using MPI (MPICH2) under MS Windows. A processor network will be supported as well. A MS Windows console application ngspice_c.exe is included in the archive. Several stand alone tools are provided, but not tested yet.

Setting up an optimization project with ASCO requires advanced know-how of using ngspice. There are several sources of information. First of all the examples provided with the distribution give hints how to start with ASCO. The original ASCO manual is provided as well, or is available here. It elaborates on the examples, using a commercial simulator, and provides a detailed description how to set up ASCO. Installation of ASCO and MPI (under Windows) is described in a file INSTALL.

Some remarks on how to set up ASCO for ngspice are given in the following sections (more to be added). These a meant not as a complete description, but are an addition the the ASCO manual.

22.5.1 Three stage operational amplifier

This example is taken from chapter 6.2.2 “Tutorial #2” from the ASCO manual. The directory examples/ngspice/amp3 contains four files:

amp3.cfg This file contains all configuration data for this optimization. Of special interest is the following section, which sets the required measurements and the constraints on the measured parameters:

```
# Measurements #
ac_power:VDD:MIN:0
dc_gain:VOUT:GE:122
unity_gain_frequency:VOUT:GE:3.15E6
phase_margin:VOUT:GE:51.8
phase_margin:VOUT:LE:70
amp3_slew_rate:VOUT:GE:0.777E6
#
```

Each of these entries is linked to a file in the /extract subdirectory, having exactly the same names as given here, e.g. ac_power, dc_gain, unity_gain, phase_margin, and amp3_slew_rate. Each of these files contains an # Info # section, which is currently not used. The # Commands # section may contain a measurement command (including ASCO parameter #SYMBOL#, see file /extract/unity_gain_frequency). It also may contain a .control section (see file /extract/phase_margin_min). During set-up #SYMBOL# is replaced by the file name, a leading ’z’, and a trailing number according to the above sequence, starting with 0.

amp3.sp This is the basic circuit description. Entries like #LM2# are ASCO-specific, defined in the # Parameters # section of file amp3.cfg. ASCO will replace these parameter placeholders with real values for simulation, determined by the optimization algorithm. The .control ... .endc section is specific to ngspice. Entries to this section may deliver work-arounds of some commands not available in ngspice, but used in other simulators. You may also define additional measurements, get access to variables and vectors, or define some data manipulation. In this example the .control section contains an op measurement, required later for slew rate calculation, as well as the ac simulation, which has to occur before any further data evaluation. Data from the op simulation are stored in a plot op1. Its name is saved in variable dt. The ac measurements sets another plot ac1. To retrieve op data from the former plot, you have to use the {$dt}.<vector> notation (see file /extract/amp3_slew_rate).

n.typ, p.typ MOSFET parameter files, to be included by amp3.sp.

Testing the set-up

Copy asco-test.exe and ngspice_c.exe (console executable of ngspice) into the directory, and run

```
$ asco-test -ngspice amp3
```

from the console window. Several files will be created during checking. If you look at <computer-name>.sp: this is the input file for ngspice_c, generated by ASCO. You will find the additional .measure commands and .control sections. The 'quit' command will be added automatically just before the .end command in its own .control section. asco-test will display error messages on the console, if the simulation or communication with ASCO is not o.k.. The output file <computer-name>.out, generated by ngspice during each simulation, contains symbols like zac_power0, zdc_gain1, zunity_gain_frequency2, zphase_margin3, zphase_margin4, and zamp3_slew_rate5. These are used to communicate the ngspice output data to ASCO. ASCO is searching for something like 'zdc_gain1 =', and then takes the next token as the input value. Calling phase_margin twice in amp3.cfg has lead to two measurements in two .control sections with different symbols (zphase_margin3, zphase_margin4).

A failing test may result in an error message from ASCO. Sometimes, however, ASCO freezes after some output statements. This may happen if ngspice issues an error message which cannot be handled by ASCO. Here it may help calling ngspice directly with the input file generated by ASCO:

```
$ ngspice_c <computer-name>.sp
```

Thus you may evaluate the ngspice messages directly.

Running the simulation

Copy (w)asco.exe, (w)asco-mpi.exe and ngspice_c.exe (console executable of ngspice) into the directory, and run

```
$ asco -ngspice amp3
```

or alternatively (if MPICH is installed)

```
$ mpiexec -n 7 asco-mpi -ngspice amp3
```

The following graph 22.1 shows the acceleration of the optimization simulation on a multi-core processor (i7 with 4 real or 8 virtual cores), 500 generations, if -n is varied. Speed is tripled, a mere 15 min suffices to optimize 21 parameters of the amplifier.

22.5.2 Digital inverter

This example is taken from chapter 6.2.1 "Tutorial #1" from the ASCO manual. In addition to the features alreday mentioned above, it adds Monte-Carlo and corner simulations. The file inv.cfg contains the following section:

```
#Optimization Flow#
Alter:yes         $do we want to do corner analysis?
MonteCarlo:yes    $do we want to do MonteCarlo analysis?
```

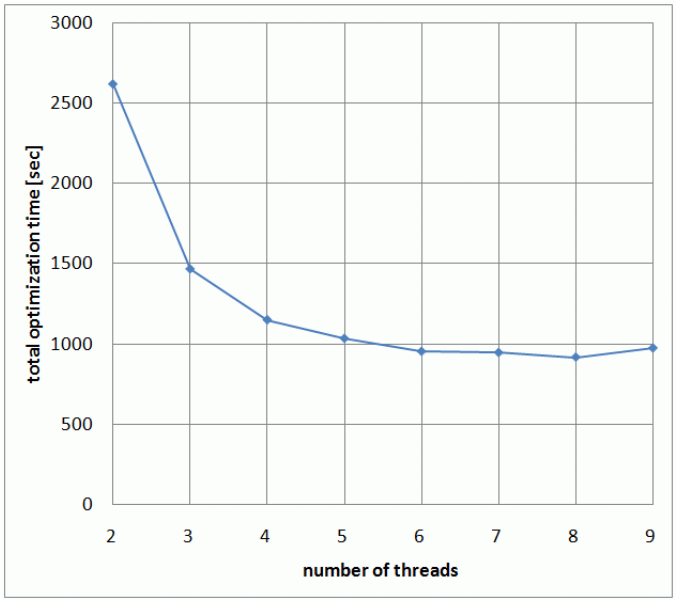

Figure 22.1: Optimization speed

```
AlterMC cost:3.00 $point at which we want to start ALTER and/or
                   MONTECARLO
ExecuteRF:no      $Execute or no the RF module to add RF parasitics?
SomethingElse:    $
#
```

Monte Carlo is switched on. It uses the AGAUSS function (see chapt. 21.2). Its parameters are generated by ASCO from the data supplied by the inv.cfg section #Monte Carlo#. According to the paper by Pelgrom on MOS transistor matching [22] the AGAUSS parameters are calculated as

$$W = AGAUSS\left(W, \frac{ABeta}{\sqrt{2 \cdot W \cdot L \cdot m}} \cdot \frac{W}{100} \cdot 10^{-6}, 1\right) \tag{22.1}$$

$$delvto = AGAUSS\left(0, \frac{AVT}{\sqrt{2 \cdot W \cdot L \cdot m}} \cdot 10^{-9}, 1\right) \tag{22.2}$$

The .ALTER command is not available in ngspice. However, a new option in ngspice to the altermod command (17.5.4) enables the simulation of design corners. The #Alter# section in inv.cfg gives details. Specific to ngspice, again several .control section are used.

```
# ALTER #
.control
* gate oxide thickness varied
altermod nm pm file [b3.min b3.typ b3.max]
.endc
.control
* power supply variation
alter vdd=[2.0 2.1 2.2]
.endc
.control
```

```
run
.endc
#
```

NMOS (nm) and PMOS (pm) model parameter sets are loaded from three different model files, each containing both NMOS and PMOS sets. b3.typ is assembled from the original parameter files n.typ and p.typ, provided with original ASCO, with some adaptation to ngspice BSIM3. The min and max sets are artificially created in that only the gate oxide thickness deviates ±1 nm from what is found in model file b3.typ. In addition the power supply voltage is varied, so in total you will find 3 x 3 simulation combinations in the input file <computer-name>.sp (after running asco-test).

22.5.3 Bandpass

This example is taken from chapter 6.2.4 "Tutorial #4" from the ASCO manual. S11 in the passband is to be maximised. S21 is used to extract side lobe parameters. The .net command is not available in ngspice, so S11 and S21 are derived with a script in file bandpass.sp as described in chapt. 17.9. The measurements requested in bandpass.cfg as

```
# Measurements #
Left_Side_Lobe:---:LE:-20
Pass_Band_Ripple:---:GE:-1
Right_Side_Lobe:---:LE:-20
S11_In_Band:---:MAX:---
#
```

are realized as 'measure' commands inside of control sections (see files in directory extract). The result of a 'measure' statement is a vector, which may be processed by commands in the following lines. In file extract/S1_In_Band #Symbol# is made available only after a short calculation (inversion of sign), using the 'print' command. 'quit' has been added to this entry because it will become the final control section in <computer-name>.sp. A disadvantage of 'measure' inside of a .control section is, that parameters from .param statements may not be used (as is done in example 22.5.4).

The bandpass example includes the calculation of RF parasitic elements defined in rfmodule.cfg (see chapt. 7.5 of the ASCO manual). This calculation is invoked by setting

```
ExecuteRF:yes     $Execute or no the RF module to add RF parasitics?
```

in bandpass.cfg. The two subcircuits LBOND_sub and CSMD_sub are generated in <computer-name>.sp to simulate these effects.

22.5.4 Class-E power amplifier

This example is taken from chapter 6.2.3 "Tutorial #3" from the ASCO manual. In this example the ASCO post processing is applied in file extract/P_OUT (see chapter 7.4 of the ASCO manual.). In this example .measurement statements are used. They allow using parameters from .param statements, because they will be located outside of .control sections, but do not allow to do data post processing inside of ngspice. You may use ASCO post processing instead.

Chapter 23

Notes

23.1 Glossary

card A logical SPICE input line. A card may be extended through the use of the "+" sign in SPICE, thereby allowing it to take up multiple lines in a SPICE deck.

code model A model of a device, function, component, etc. which is based solely on a C programming language-based function. In addition to the code models included with the XSPICE option of the ngspice simulator, you can use code models that you develop for circuit modeling.

deck A collection of SPICE cards which together specify all input information required in order to perform an analysis. A "deck" of "cards" will in fact be contained within a file on the host computer system.

element card A single, logical line in an ngspice circuit description deck which describes a circuit element. Circuit elements are connected to each other to form circuits (e.g., a logical card which describes a resistor, such as R1 2 0 10K, is an element card).

instance A unique occurrence of a circuit element. See "element card", in which the instance "R1" is specified as a unique element (instance) in a hypothetical circuit description.

macro A macro, in the context of this document, refers to a C language macro which supports the construction of user-defined models by simplifying input/output and parameter-passing operations within the Model Definition File.

.mod Refers to the Model Definition File in XSPICE. The file suffix reflects the file-name of the model definition file: cfunc.mod.

.model Refers to a model card associated with an element card in ngspice. A model card allows for data defining an instance to be conveniently located in the ngspice deck such that the general layout of the elements is more readable.

Nutmeg The ngspice default post-processor. This provides a simple stand-alone simulator interface which can be used with the ngspice simulator to display and plot simulator raw files.

subcircuit A "device" within an ngspice deck which is defined in terms of a group of element cards and which can be referenced in other parts of the ngspice deck through element cards.

23.2 Acronyms and Abbreviations

ATE Automatic Test Equipment

CAE Computer-Aided Engineering

CCCS Current Controlled Current Source.

CCVS Current Controlled Voltage Source.

FET Field Effect Transistor

IDD Interface Design Document

IFS Refers to the Interface Specification File. The abbreviation reflects the file name of the Interface Specification File: ifspec.ifs.

MNA Modified Nodal Analysis

MOSFET Metal Oxide Semiconductor Field Effect Transistor

PWL Piece-Wise Linear

RAM Random Access Memory

ROM Read Only Memory

SDD Software Design Document

SI Simulator Interface

SPICE Simulation Program with Integrated Circuit Emphasis. This program was developed at the University of California at Berkeley and is the origin of ngspice.

SPICE3 Version 3 of SPICE.

SRS Software Requirements Specification

SUM Software User's Manual

UCB University of California at Berkeley

UDN User-Defined Node(s)

VCCS Voltage Controlled Current Source.

VCVS Voltage Controlled Voltage Source

XSPICE Extended SPICE; option to ngspice integrating predefined or user defined code models for event-driven mixed-signal simulation.

Bibliography

[1] A. Vladimirescu and S. Liu, The Simulation of MOS Integrated Circuits Using SPICE2 ERL Memo No. ERL M80/7, Electronics Research Laboratory University of California, Berkeley, October 1980

[2] T. Sakurai and A. R. Newton, A Simple MOSFET Model for Circuit Analysis and its application to CMOS gate delay analysis and series-connected MOSFET Structure ERL Memo No. ERL M90/19, Electronics Research Laboratory, University of California, Berkeley, March 1990

[3] B. J. Sheu, D. L. Scharfetter, and P. K. Ko, SPICE2 Implementation of BSIM ERL Memo No. ERL M85/42, Electronics Research Laboratory University of California, Berkeley, May 1985

[4] J. R. Pierret, A MOS Parameter Extraction Program for the BSIM Model ERL Memo Nos. ERL M84/99 and M84/100, Electronics Research Laboratory University of California, Berkeley, November 1984

[5] Min-Chie Jeng, Design and Modeling of Deep Submicrometer MOSFETSs ERL Memo Nos. ERL M90/90, Electronics Research Laboratory, University of California, Berkeley, October 1990

[6] Soyeon Park, Analysis and SPICE implementation of High Temperature Effects on MOSFET, Master's thesis, University of California, Berkeley, December 1986.

[7] Clement Szeto, Simulation of Temperature Effects in MOSFETs (STEIM), Master's thesis, University of California, Berkeley, May 1988.

[8] J.S. Roychowdhury and D.O. Pederson, Efficient Transient Simulation of Lossy Interconnect, Proc. of the 28th ACM/IEEE Design Automation Conference, June 17-21 1991, San Francisco

[9] A. E. Parker and D. J. Skellern, An Improved FET Model for Computer Simulators, IEEE Trans CAD, vol. 9, no. 5, pp. 551-553, May 1990.

[10] R. Saleh and A. Yang, Editors, Simulation and Modeling, IEEE Circuits and Devices, vol. 8, no. 3, pp. 7-8 and 49, May 1992.

[11] H.Statz et al., GaAs FET Device and Circuit Simulation in SPICE, IEEE Transactions on Electron Devices, V34, Number 2, February 1987, pp160-169.

[12] Weidong Liu et al.: "BSIM3v3.2.3 MOSFET Model User's Manual", BSIM3v3.2.3

[13] Weidong Lui et al.: "BSIM3.v3.3.0 MOSFET Model User's Manual", BSIM3v3.3.0

[14] "SPICE3.C1 Nutmeg Programmer's Manual", Department of Electrical Engineering and Computer Sciences, University of California, Berkeley, California, April, 1987.

[15] Thomas L. Quarles: SPICE3 Version 3C1 User's Guide, Department of Electrical Engineering and Computer Sciences, University of California, Berkeley, California, April, 1989.

[16] Brian Kernighan and Dennis Ritchie: "The C Programming Language", Second Edition, Prentice-Hall, Englewood Cliffs, New Jersey, 1988.

[17] "Code-Level Modeling in XSPICE", F.L. Cox, W.B. Kuhn, J.P. Murray, and S.D. Tynor, published in the Proceedings of the 1992 International Symposium on Circuits and Systems, San Diego, CA, May 1992, vol 2, pp. 871-874.

[18] "A Physically Based Compact Model of Partially Depleted SOI MOSFETs for Analog Circuit Simulation", Mike S. L. Lee, Bernard M. Tenbroek, William Redman-White, James Benson, and Michael J. Uren, IEEE JOURNAL OF SOLID-STATE CIRCUITS, VOL. 36, NO. 1, JANUARY 2001, pp. 110-121

[19] "A Realistic Large-signal MESFET Model for SPICE", A. E. Parker, and D. J. Skellern, IEEE Transactions on Microwave Theory and Techniques, vol. 45, no. 9, Sept. 1997, pp. 1563-1571.

[20] "Integrating RTS Noise into Circuit Analysis", T. B. Tang and A. F. Murray, IEEE ISCAS, 2009, Proc. of IEEE ISCAS, Taipei, Taiwan, May 2009, pp 585-588 (link)

[21] R. Storn, and K. Price: "Differential Evolution", technical report TR-95-012, ICSI, March 1995, see report download, or the DE web page

[22] M. J. M. Pelgrom e.a.: "Matching Properties of MOS Transistors", IEEE J. Sol. State Circ, vol. 24, no. 5, Oct. 1989, pp. 1433-1440

Part II

XSPICE Software User's Manual

Chapter 24

XSPICE Basics

24.1 ngspice with the XSPICE option

The XSPICE option allows you to add event-driven simulation capabilities to NGSPICE. NGSPICE now is the main software program that performs mathematical simulation of a circuit specified by you, the user. It takes input in the form of commands and circuit descriptions and produces output data (e.g. voltages, currents, digital states, and waveforms) that describe the circuit's behavior.

Plain NGSPICE is designed for analog simulation and is based exclusively on matrix solution techniques. The XSPICE option adds even-driven simulation capabilities. Thus, designs that contain significant portions of digital circuitry can be efficiently simulated together with analog components. NGSPICE with XSPICE option also includes a "User-Defined Node" capability that allows event-driven simulations to be carried out with any type of data.

The XSPICE option has been developed by the Computer Science and Information Technology Laboratory at Georgia Tech Research Institute of the Georgia Institute of Technology, Atlanta, Georgia 30332 at around 1990 and enhanced by the NGSPICE team. The manual is based on the original XSPICE user's manual, made available from Georgia Tech.

In the following, the term "XSPICE" may be read as "NGSPICE with XSPICE code model subsystem enabled". You may enable the option by adding `--enable-xspice` to the `./configure` command. The MS Windows distribution already contains the XSPICE option.

24.2 The XSPICE Code Model Subsystem

The new component of ngspice, the Code Model Subsystem, provides the tools needed to model the various parts of your system. While NGSPICE is targeted primarily at integrated circuit (IC) analysis, XSPICE includes features to model and simulate board-level and system-level designs as well. The Code Model Subsystem is central to this new capability, providing XSPICE with an extensive set of models to use in designs and allowing you to add your own models to this model set.

The NGSPICE simulator at the core of XSPICE includes built-in models for discrete components commonly found within integrated circuits. These "model primitives" include components such as resistors, capacitors, diodes, and transistors. The XSPICE Code Model Subsystem

extends this set of primitives in two ways. First, it provides a library of over 40 additional primitives, including summers, integrators, digital gates, controlled oscillators, s-domain transfer functions, and digital state machines. See chapter 12 for a description of the library entries. Second, it adds a code model generator to ngspice which provides a set of programming utilities to make it easy for you to create your own models by writing them in the C programming language.

The code models are generated upon compiling ngspice. They are stored in shared libraries, which may be distributed independently from the ngspice sources. Upon runtime ngspice will load the code model libraries and make the code model instances available for simulation.

24.3 XSPICE Top-Level Diagram

A top-level diagram of the XSPICE system integrated into ngspice is shown in Figure 24.1. The XSPICE Simulator is made up of the NGSPICE core, the event-driven algorithm, circuit description syntax parser extensions, a loading routine for code models, and the Nutmeg user interface. The XSPICE Code Model Subsystem consists of the Code Model Generator, 5 standard code model library sources with more than 40 code models, the sources for Node Type Libraries, and all the interfaces to User-Defined Code Models and to User-Defined Node Types.

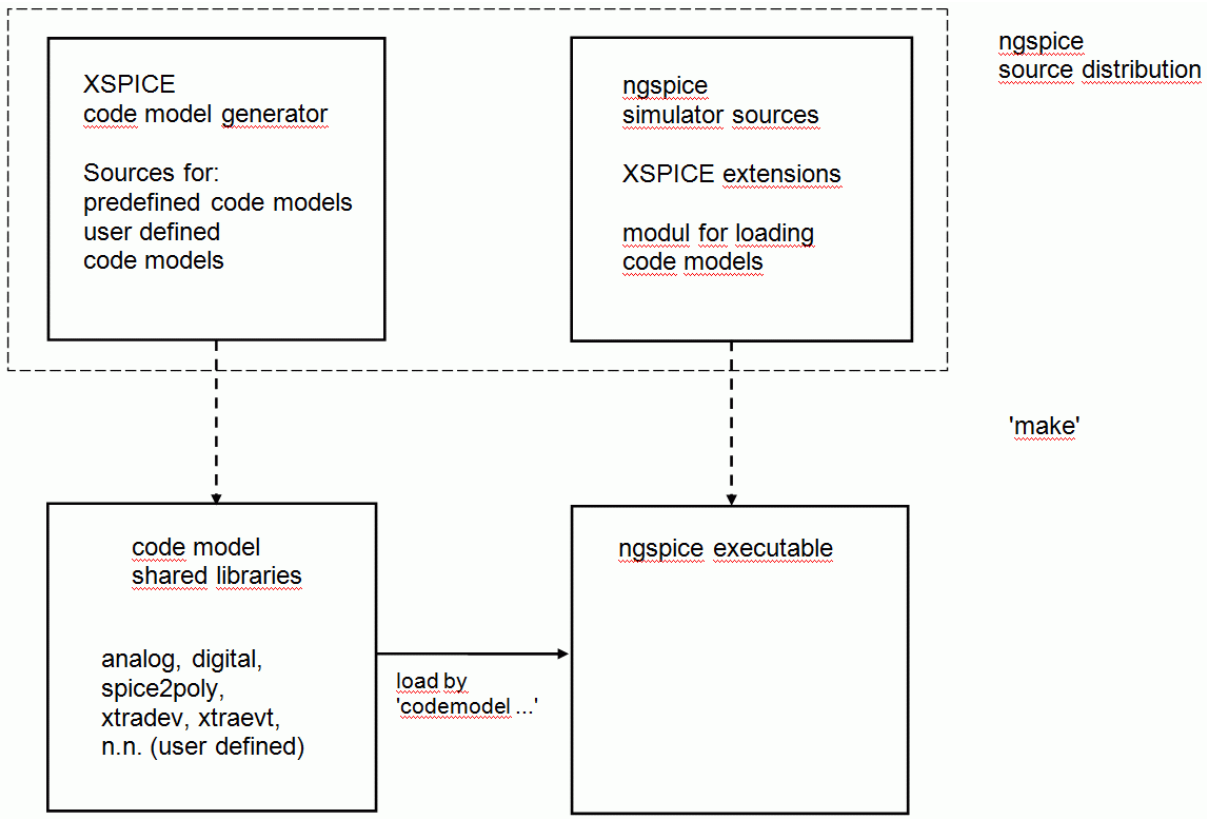

Figure 24.1: ngspice/XSPICE Top-Level Diagram

Chapter 25

Execution Procedures

This chapter covers operation of the XSPICE simulator and the Code Model Subsystem. It begins with background material on simulation and modeling and then discusses the analysis modes supported in XSPICE and the circuit description syntax used for modeling. Detailed descriptions of the predefined Code Models and Node Types provided in the XSPICE libraries are also included.

25.1 Simulation and Modeling Overview

This section introduces the concepts of circuit simulation and modeling. It is intended primarily for users who have little or no previous experience with circuit simulators, and also for those who have not used circuit simulators recently. However, experienced SPICE users may wish to scan the material presented here since it provides background for new Code Model and User-Defined Node capabilities of the XSPICE option.

25.1.1 Describing the Circuit

This section provides an overview of the circuit description syntax expected by the XSPICE simulator. A general understanding of circuit description syntax will be helpful to you should you encounter problems with your circuit and need to examine the simulator's error messages, or should you wish to develop your own models.

This section will introduce you to the creation of circuit description input files using the Nutmeg user interface. Note that this material is presented in an overview form. Details of circuit description syntax are given later in this chapter and in the previous chapters of this manual.

25.1.1.1 Example Circuit Description Input

Although different SPICE-based simulators may include various enhancements to the basic version from the University of California at Berkeley, most use a similar approach in describing circuits. This approach involves capturing the information present in a circuit schematic in the form of a text file that follows a defined format. This format requires the assignment of alphanumeric identifiers to each circuit node, the assignment of component identifiers to each

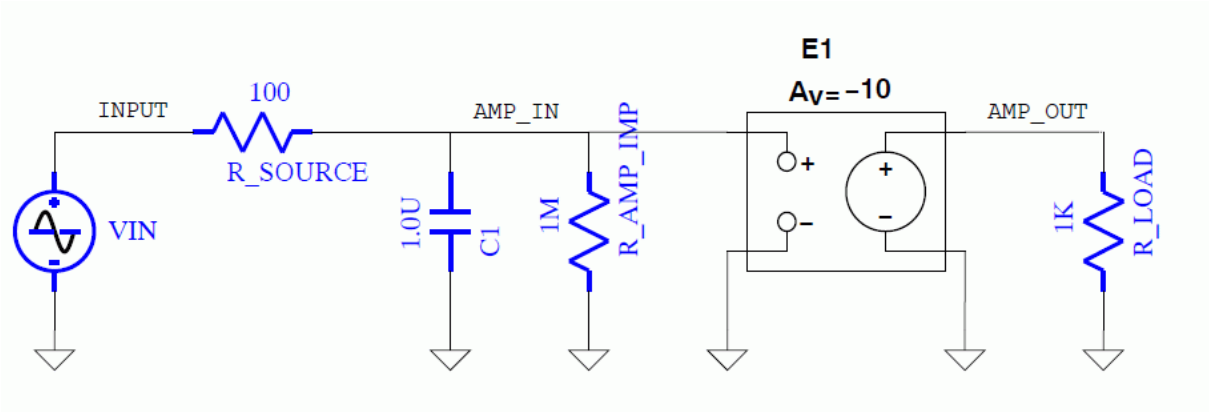

Figure 25.1: Example Circuit 1

circuit device, and the definition of the significant parameters for each device. For example, the circuit description below shows the equivalent input file for the circuit shown in Figure25.1.

```
Small Signal Amplifier
*
*This circuit simulates a simple small signal amplifier.
*
Vin          Input 0                    0 SIN(0 .1 500Hz)
R_source     Input Amp_In               100
C1           Amp_In 0                   1uF
R_Amp_Input  Amp_In 0                   1MEG
E1           (Amp:Out 0) (Amp_In 0)    -10
R_Load       Amp_Out 0                  1000
*
.Tran 1.0u 0.01
*
.end
```

This file exhibits many of the most important properties common to all SPICE circuit description files including the following:

- The first line of the file is always interpreted as the title of the circuit. The title may consist of any text string.
- Lines which provide user comments, but no circuit information, are begun by an asterisk.
- A circuit device is specified by a device name, followed by the node(s) to which it is connected, and then by any required parameter information.
- The first character of a device name tells the simulator what kind of device it is (e.g. R = resistor, C = capacitor, E = voltage controlled voltage source).
- Nodes may be labeled with any alphanumeric identifier. The only specific labeling requirement is that 0 must be used for ground.
- A line that begins with a dot is a “control directive”. Control directives are used most frequently for specifying the type of analysis the simulator is to carry out.

- An ".end" statement must be included at the end of the file.
- With the exception of the Title and .end statements, the order in which the circuit file is defined is arbitrary.
- All identifiers are case insensitive - the identifier 'npn' is equivalent to 'NPN' and to 'nPn'.
- Spaces and parenthesis are treated as white space.
- Long lines may be continued on a succeeding line by beginning the next line with a '+' in the first column.

In this example, the title of the circuit is 'Small Signal Amplifier'. Three comment lines are included before the actual circuit description begins. The first device in the circuit is voltage source 'Vin', which is connected between node 'Input' and '0' (ground). The parameters after the nodes specify that the source has an initial value of 0, a wave shape of 'SIN', and a DC offset, amplitude, and frequency of 0, .1, and 500 respectively. The next device in the circuit is resistor 'R_Source', which is connected between nodes 'Input' and 'Amp_In', with a value of 100 Ohms. The remaining device lines in the file are interpreted similarly.

The control directive that begins with '.Tran' specifies that the simulator should carry out a simulation using the Transient analysis mode. In this example, the parameters to the transient analysis control directive specify that the maximum time-step allowed is 1 microsecond and that the circuit should be simulated for 0.01 seconds of circuit time.

Other control cards are used for other analysis modes. For example, if a frequency response plot is desired, perhaps to determine the effect of the capacitor in the circuit, the following statement will instruct the simulator to perform a frequency analysis from 100 Hz to 10 MHz in decade intervals with ten points per decade.

```
.ac dec 10 100 10meg
```

To determine the quiescent operating point of the circuit, the following statement may be inserted in the file.

```
.op
```

A fourth analysis type supported by ngspice is swept DC analysis. An example control statement for the analysis mode is

```
.dc Vin -0.1 0.2 .05
```

This statement specifies a DC sweep which varies the source Vin from -100 millivolts to +200 millivolts in steps of 50 millivolts.

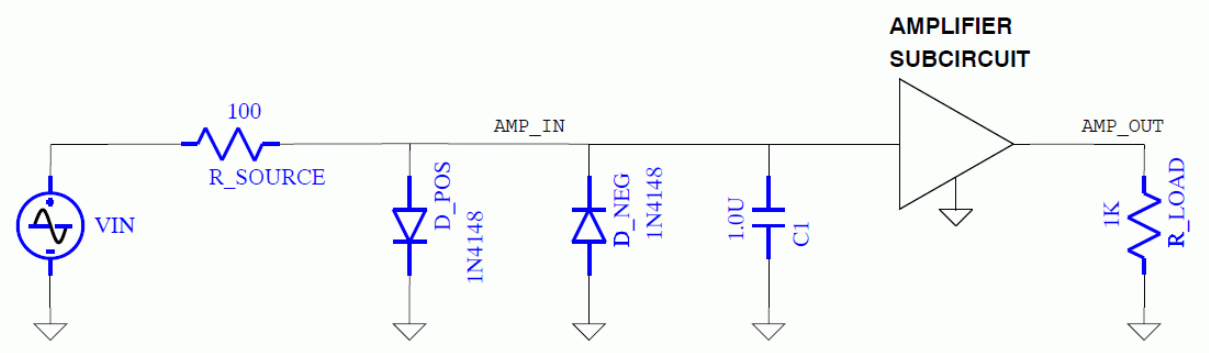

Figure 25.2: Example Circuit 2

25.1.1.2 Models and Subcircuits

The file discussed in the previous section illustrated the most basic syntax rules of a circuit description file. However, ngspice (and other SPICE-based simulators) include many other features which allow for accurate modeling of semiconductor devices such as diodes and transistors and for grouping elements of a circuit into a macro or 'subcircuit' description which can be reused throughout a circuit description. For instance, the file shown below is a representation of the schematic shown in Figure 25.2.

```
Small Signal Amplifier with Limit Diodes
*
*This circuit simulates a small signal amplifier
*with a diode limiter.
*
.dc Vin -1 1 .05
*
Vin        Input 0 DC            0
R_source   Input Amp_In        100
*
D_Neg      0 Amp_In            1n4148
D_Pos      Amp_In 0            1n4148
*
C1         Amp_In 0            1uF
X1         Amp_In 0 Amp.Out    Amplifier
R_Load     Amp_Out 0           1000
*
.model 1n4148 D (is=2.495E-09 rs=4.755E-01 n=1.679E+00
+ tt=3.030E-09 cjo=1.700E-12 vj=1 m=1.959E-01 bv=1.000E+02
+ ibv=1.000E-04)
*
.subckt Amplifier Input Common Output
E1         (Output Common) (Input Common) -10
R_Input    Input           Common 1meg
.ends Amplifier
*
.end
```

This is the same basic circuit as in the initial example, with the addition of two components and some changes to the simulation file. The two diodes have been included to illustrate the use of device models, and the amplifier is implemented with a subcircuit. Additionally, this file shows the use of the swept DC control card.

Device Models Device models allow you to specify, when required, many of the parameters of the devices being simulated. In this example, model statements are used to define the silicon diodes. Electrically, the diodes serve to limit the voltage at the amplifier input to values between about ±700 millivolts. The diode is simulated by first declaring the "instance" of each diode with a device statement. Instead of attempting to provide parameter information separately for both diodes, the label "1n4148" alerts the simulator that a separate model statement is included in the file which provides the necessary electrical specifications for the device ("1n4148" is the part number for the type of diode the model is meant to simulate).

The model statement that provides this information is:

```
.model 1n4148 D (is=2.495E-09 rs=4.755E-01 n=1.679E+00
+                tt=3.030E-09 cjo=1.700E-12 vj=1 m=1.959E-01
+                bv=1.000E+02 ibv=1.000E-04)
```

The model statement always begins with the string ".model" followed by an identifier and the model type (D for diode, NPN for NPN transistors, etc).

The optional parameters ('is', 'rs', 'n', 'etc.') shown in this example configure the simulator's mathematical model of the diode to match the specific behavior of a particular part (e.g. a "1n4148").

Subcircuits In some applications, describing a device by embedding the required elements in the main circuit file, as is done for the amplifier in Figure 25.1, is not desirable. A hierarchical approach may be taken by using subcircuits. An example of a subcircuit statement is shown in the second circuit file:

```
X1 Amp_In 0 Amp_Out
```

Amplifier Subcircuits are always identified by a device label beginning with "X". Just as with other devices, all of the connected nodes are specified. Notice, in this example, that three nodes are used. Finally, the name of the subcircuit is specified. Elsewhere in the circuit file, the simulator looks for a statement of the form:

```
.subckt <Name> <Node1> <Node2> <Node3> ...
```

This statement specifies that the lines that follow are part of the Amplifier subcircuit, and that the three nodes listed are to be treated wherever they occur in the subcircuit definition as referring, respectively, to the nodes on the main circuit from which the subcircuit was called. Normal device, model, and comment statements may then follow. The subcircuit definition is concluded with a statement of the form:

```
.ends <Name>
```

25.1.1.3 XSPICE Code Models

In the previous example, the specification of the amplifier was accomplished by using a NGSPICE Voltage Controlled Voltage Source device. This is an idealization of the actual amplifier. Practical amplifiers include numerous non-ideal effects, such as offset error voltages and non-ideal input and output impedances. The accurate simulation of complex, real-world components can lead to cumbersome subcircuit files, long simulation run times, and difficulties in synthesizing the behavior to be modeled from a limited set of internal devices known to the simulator.

To address these problems, XSPICE allows you to create Code Models which simulate complex, non-ideal effects without the need to develop a subcircuit design. For example, the following file provides simulation of the circuit in Figure 25.2, but with the subcircuit amplifier replaced with a Code Model called 'Amp' that models several non-ideal effects including input and output impedance and input offset voltage.

```
Small Signal Amplifier
*
*This circuit simulates a small signal amplifier
*with a diode limiter.
*
.dc Vin -1 1 .05
*
Vin        Input 0             DC 0
R_source   Input Amp_In        100
*
D_Neg 0    Amp_In              1n4148
D_Pos      Amp_In 0            1n4148
*
C1         Amp_In 0            1uF
A1         Amp_In 0 Amp_Out    Amplifier
R_Load     Amp_Out 0           1000
*
.model 1n4148 D (is=2.495E-09 rs=4.755E-01 n=1.679E+00
+ tt=3.030E-09 cjo=1.700E-12 vj=1 m=1.959E-01 bv=1.000E+02
+ ibv=1.000E-04)
*
.model Amplifier Amp (gain = -10 in_offset = 1e-3
+                     rin = 1meg rout = 0.4)
*
.end
```

A statement with a device label beginning with "A" alerts the simulator that the device uses a Code Model. The model statement is similar in form to the one used to specify the diode. The model label 'Amp' directs XSPICE to use the code model with that name. Parameter information has been added to specify a gain of -10, an input offset of 1 millivolt, an input impedance of 1 meg ohm, and an output impedance of 0.4 ohm. Subsequent sections of this document detail the steps required to create such a Code Model and include it in the XSPICE simulator.

25.1.1.4 Node Bridge Models

When a mixed-mode simulator is used, some method must be provided for translating data between the different simulation algorithms. XSPICE's Code Model support allows you to develop models that work under the analog simulation algorithm, the event-driven simulation algorithm, or both at once.

In XSPICE, models developed for the express purpose of translating between the different algorithms or between different User-Defined Node types are called "Node Bridge" models. For translations between the built-in analog and digital types, predefined node bridge models are included in the XSPICE Code Model Library.

25.1.1.5 Practical Model Development

In practice, developing models often involves using a combination of NGSPICE passive devices, device models, subcircuits, and XSPICE Code Models. XSPICE's Code Models may be seen as an extension to the set of device models offered in standard NGSPICE. The collection of over 40 predefined Code Models included with XSPICE provides you with an enriched set of modeling primitives with which to build subcircuit models. In general, you should first attempt to construct your models from these available primitives. This is often the quickest and easiest method.

If you find that you cannot easily design a subcircuit to accomplish your goal using the available primitives, then you should turn to the code modeling approach. Because they are written in a general purpose programming language (C), code models enable you to simulate virtually any behavior for which you can develop a set of equations or algorithms.

25.2 Circuit Description Syntax

If you need to debug a simulation, if you are planning to develop your own models, or if you are using the XSPICE simulator through the Nutmeg user interface, you will need to become familiar with the circuit description language.

The previous sections presented example circuit description input files. The following sections provide more detail on XSPICE circuit descriptions with particular emphasis on the syntax for creating and using models. First, the language and syntax of the NGSPICE simulator are described and references to additional information are given. Next, XSPICE extensions to the ngspice syntax are detailed. Finally, various enhancements to NGSPICE operation are discussed including polynomial sources, arbitrary phase sources, supply ramping, matrix conditioning, convergence options, and debugging support.

25.2.1 XSPICE Syntax Extensions

In the preceding discussion, NGSPICE syntax was reviewed, and those features of NGSPICE that are specifically supported by the XSPICE simulator were enumerated. In addition to these features, there exist extensions to the NGSPICE capabilities that provide much more flexibility in describing and simulating a circuit. The following sections describe these capabilities, as well as the syntax required to make use of them.

25.2.1.1 Convergence Debugging Support

When a simulation is failing to converge, the simulator can be asked to return convergence diagnostic information that may be useful in identifying the areas of the circuit in which convergence problems are occurring. When running through the Nutmeg user interface, these messages are written directly to the terminal.

25.2.1.2 Digital Nodes

Support is included for digital nodes that are simulated by an event-driven algorithm. Because the event-driven algorithm is faster than the standard SPICE matrix solution algorithm, and because all "digital", "real", "int" and User-Defined Node types make use of the event-driven algorithm, reduced simulation time for circuits that include these models can be anticipated compared to simulation of the same circuit using analog code models and nodes.

25.2.1.3 User-Defined Nodes

Support is provided for User Defined Nodes that operate with the event-driven algorithm. These nodes allow the passing of arbitrary data structures among models. The real and integer node types supplied with XSPICE are actually predefined User-Defined Node types.

25.2.1.4 Supply Ramping

A supply ramping function is provided by the simulator as an option to a transient analysis to simulate the turn-on of power supplies to a board level circuit. To enable this option, the compile time flag **XSPICE_EXP** has to be set, e.g. by adding `CFLAGS="-DXSPICE_EXP"` to the ./configure command line. The supply ramping function linearly ramps the values of all independent sources and the capacitor and inductor code models (code model extension) with initial conditions toward their final value at a rate which you define. A complete ngspice deck example of usage of the `ramptime` option is shown below.

```
Example:

Supply ramping option
*
* This circuit demonstrates the use of the option
* "ramptime" which ramps independent sources and the
* capacitor and inductor initial conditions from
* zero to their final value during the time period
* specified.
*
*
.tran 0.1 5
.option ramptime=0.2
* a1 1 0 cap
.model cap capacitor (c=1000uf ic=1)
r1 1 0 1k
*
a2 2 0 ind
.model ind inductor (l=1H ic=1)
r2 2 0 1.0
*
v1 3 0 1.0
r3 3 0 1k
*
i1 4 0 1e-3
r4 4 0 1k
*
v2 5 0 0.0 sin(0 1 0.3 0 0 45.0)
r5 5 0 1k
*
.end
```

25.3 How to create code models

The following instruction to create an additional code model uses the ngspice infrastructure and some 'intelligent' copy and paste. As an example an extra code model d_xxor is created in the xtradev shared library, reusing the existing d_xor model from the digital library. More detailed information will be made available in chapter 27.

You should have downloaded ngspice, either the most recent distribution or from the CVS sources, and compiled and installed it properly according to your operating system and the instructions given in chapter 31 of the Appendix, especially chapt. 31.1.5 (for LINUX users), or chapt. 31.2.1 for MINGW and MS Windows (MS Visual Studio will not do, because we not yet have integrated the code model generator into this compiler! You may however use all code models later with any ngspice executable.) . Then Cd into directory ng-spice-rework/src/xspice/icm/xtradev.

Create a new directory

```
mkdir d_xxor
```

Copy the two files cfunc.mod and ifspec.ifs from ng-spice-rework/src/xspice/icm/digital/d_xor to ng-spice-rework/src/xspice/icm/xtradev/d_xxor. These two files may serve as a template for your new model!

For simplicity reasons we do only a very simple editing to these files here, in fact the functionality is not changed, just the name translated to a new model. Edit the new cfunc.mod: In lines 5, 28, 122, 138, 167, 178 replace the old name (d_xor) by the new name d_xxor. Edit the new ifspec.ifs: In lines 16, 23, 24 replace cm_d_xor by cm_d_xxor and d_xor by d_xxor.

Make ngspice aware of the new code model by editing file
ng-spice-rework/src/xspice/icm/xtradev/modpath.lst:

Add a line with the new model name d_xxor.

Redo ngspice by entering directory ng-spice-rework/release, and issuing the commands:

```
make
```

```
sudo make install
```

And that's it! In ng-spice-rework/release/src/xspice/icm/xtradev/ you now will find cfunc.c and ifspec.c and the corresponding object files. The new code model d_xxor resides in the shared library xtradev.cm, and is available after ngspice is started. As a test example you may edit ng-spice-rework/src/xspice/examples/digital_models1.deck, and change line 60 to the new model:

```
.model d_xor1 d_xxor (rise_delay=1.0e-6 fall_delay=2.0e-6 input_load=1.0e-12)
```

The complete input file follows:

```
Code Model Test: new xxor
*
*** analysis type ***
.tran .01s 4s
*
*** input sources ***
*
v2 200 0 DC PWL( (0 0.0) (2 0.0) (2.0000000001 1.0) (3 1.0) )
*
v1 100 0 DC PWL( (0 0.0) (1.0 0.0) (1.0000000001 1.0) (2 1.0)
+     (2.0000000001 0.0) (3 0.0) (3.0000000001 1.0) (4 1.0) )
*
*** resistors to ground ***
r1 100 0 1k
r2 200 0 1k
*
*** adc_bridge blocks ***
aconverter [200 100] [2 1] adc_bridge1
.model adc_bridge1 adc_bridge (in_low=0.1 in_high=0.9
+                  rise_delay=1.0e-12 fall_delay=1.0e-12)
*
*** xor block ***
a7 [1 2] 70 d_xor1
.model d_xor1 d_xxor (rise_delay=1.0e-6 fall_delay=2.0e-6
+                    input_load=1.0e-12)
*
*** dac_bridge blocks ****
abridge1 [70] [out] dac1
.model dac1 dac_bridge(out_low = 0.7 out_high = 3.5
+ out_undef = 2.2 input_load = 5.0e-12 t_rise = 50e-9
+ t_fall = 20e-9)
*
*** simulation and plotting ***
.control
run
plot allv
.endc
*
.end
```

An analog input, delivered by the pwl voltage sources, is transformed into the digital domain by an adc_bridge, processed by the new code model d_xxor, and then translated back into the analog domain.

If you want to change the functionality of the new model, you have to edit ifspec.ifs for the code model interface and cfunc.mod for the detailed functionality of the new model. Please see chapter 27, especially chapters 27.6 ff. for any details. And of course you make take the existing

analog, digital, mixed signal and other existing code models (to be found in the subdirectories to ng-spice-rework/release/src/xspice/icm) as stimulating examples for your work.

Chapter 26

Example circuits

The following chapter is designed to demonstrate XSPICE features. The first example circuit models the circuit of Figure 25.2 using the XSPICE gain block code model to substitute for the more complex and computationally expensive ngspice transistor model. This example illustrates one way in which XSPICE code models can be used to raise the level of abstraction in circuit modeling to improve simulation speed.

The next example, shown in Figure 26.1, illustrates many of the more advanced features offered by XSPICE. This circuit is a mixed-mode design incorporating digital data, analog data, and User-Defined Node data together in the same simulation. Some of the important features illustrated include:

- Creating and compiling Code Models
- Creating an XSPICE executable that incorporates these new models
- The use of "node bridge" models to translate data between the data types in the simulation
- Plotting analog and event-driven (digital and User-Defined Node) data
- Using the "eprint" command to print event-driven data

Throughout these examples, we assume that ngspice with XSPICE option has already been installed on your system and that your user account has been set up with the proper search path and environment variable data.

The examples also assume that you are running under LINUX and will use standard LINUX commands such as “cp” for copying files, etc. If you are using a different set up, with different operating system command names, you should be able to translate the commands shown into those suitable for your installation. Finally, file system path-names given in the examples assume that ngspice + XSPICE has been installed on your system in directory “/usr/local/xspice-1-0”. If your installation is different, you should substitute the appropriate root path-name where appropriate.

26.1 Amplifier with XSPICE model “gain”

The circuit, as has been shown in Figure 25.2, is extended here by using the XSPICE code model "gain". The ngspice circuit description for this circuit is shown below.

Example:

```
A transistor amplifier circuit
*
.tran 1e-5 2e-3
*
vin 1 0 0.0 ac 1.0 sin(0 1 1k)
*
ccouple 1 in 10uF
rzin in 0 19.35k
*
aamp in aout gain_block
.model gain_block gain (gain = -3.9 out_offset = 7.003)
*
rzout aout coll 3.9k
rbig coll 0 1e12
*
.end
```

Notice the component "aamp". This is an XSPICE code model device. All XSPICE code model devices begin with the letter "a" to distinguish them from other ngspice devices. The actual code model used is referenced through a user-defined identifier at the end of the line - in this case"gain_block". The type of code model used and its parameters appear on the associated .model card. In this example, the gain has been specified as -3.9 to approximate the gain of the transistor amplifier, and the output offset (out_offset) has been set to 7.003 according to the DC bias point information obtained from the DC analysis in Example 1.

Notice also that input and output impedances of the one-transistor amplifier circuit are modeled with the resistors "rzin" and "rzout", since the "gain" code model defaults to an ideal voltage-input, voltage-output device with infinite input impedance and zero output impedance.

Lastly, note that a special resistor "rbig" with value "1e12" has been included at the opposite side of the output impedance resistor "rzout". This resistor is required by ngspice's matrix solution formula. Without it, the resistor "rzout" would have only one connection to the circuit, and an ill-formed matrix could result. One way to avoid such problems without adding resistors explicitly is to use the ngspice "rshunt" option described in this document under ngspice Syntax Extensions/General Enhancements.

To simulate this circuit, copy the file xspice_c2.cir from the directory /src/xspice/examples into a directory in your account.

```
$ cp /examples/xspice/xspice_c2.cir xspice_c2.cir
```

Invoke the simulator on this circuit:

```
$ ngspice xspice_c2.cir
```

After a few moments, you should see the ngspice prompt:

```
ngspice 1 ->
```

Now issue the "run" command and when the prompt returns, issue the "plot" command to examine the voltage at the node "coll".

```
ngspice 1 -> run
ngspice 2 -> plot coll
```

The resulting waveform closely matches that from the original transistor amplifier circuit simulated in Example 1.

When you are done, enter the "quit" command to leave the simulator and return to the command line.

```
ngspice 3 -> quit
```

So long.

Using the "rusage" command, you can verify that this abstract model of the transistor amplifier runs somewhat faster than the full circuit of Example 1. This is because the code model is less complex computationally. This demonstrates one important use of XSPICE code models - to reduce run time by modeling circuits at a higher level of abstraction. Speed improvements vary and are most pronounced when a large amount of low-level circuitry can be replaced by a small number of code models and additional components.

26.2 XSPICE advanced usage

26.2.1 Circuit example C3

An equally important use of code models is in creating models for circuits and systems that do not easily lend themselves to synthesis using standard ngspice primitives (resistors, capacitors, diodes, transistors, etc.). This occurs often when trying to create models of ICs for use in simulating board-level designs. Creating models of operational amplifiers such as an LM741 or timer ICs such as an LM555 is greatly simplified through the use of XSPICE code models. Another example of code model use is shown in the next example where a complete sampled-data system is simulated using XSPICE analog, digital, and User-Defined Node types simultaneously.

The circuit shown in Figure 26.1 is designed to demonstrate several of the more advanced features of XSPICE. In this example, you will be introduced to the process of creating code models and linking them into ngspice. You will also learn how to print and plot the results of event-driven analysis data. The ngspice/XSPICE circuit description for this example is shown below.

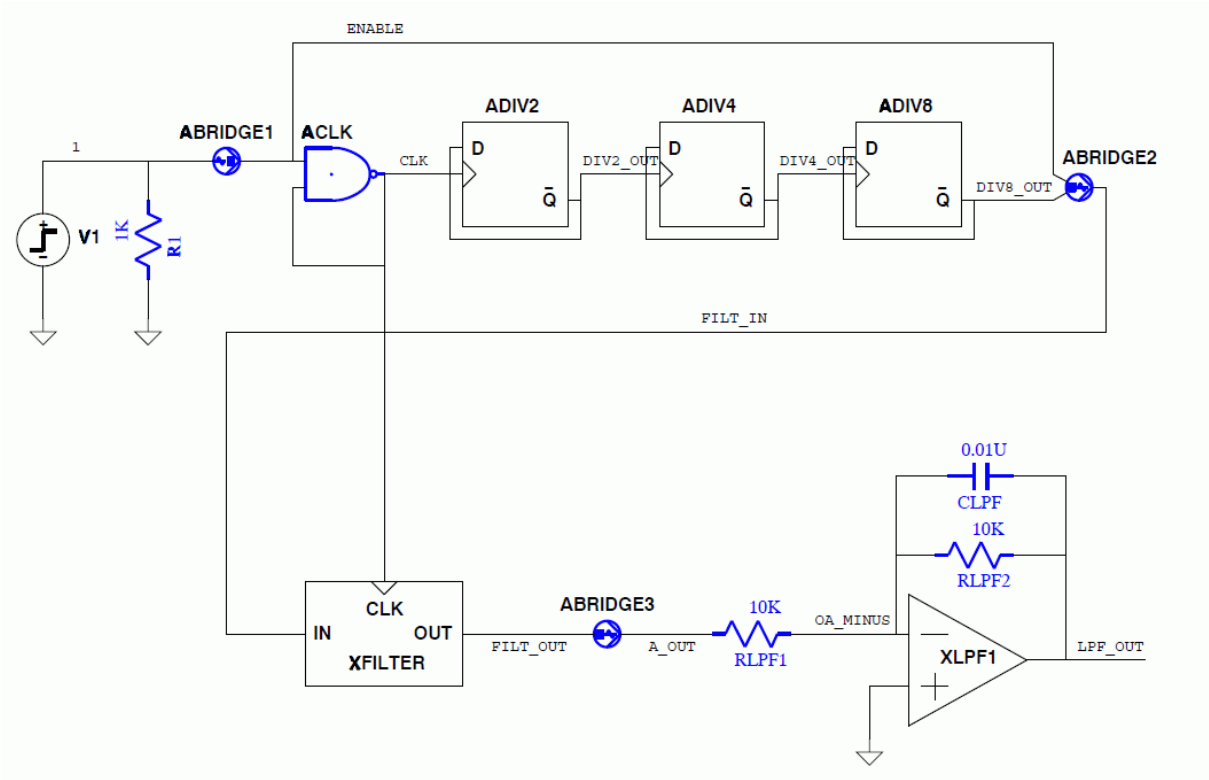

Figure 26.1: Example Circuit C3

Example:

```
Mixed IO types
* This circuit contains a mixture of IO types, including
* analog, digital, user-defined (real), and 'null'.
*
* The circuit demonstrates the use of the digital and
* user-defined node capability to model system-level designs
* such as sampled-data filters. The simulated circuit
* contains a digital oscillator enabled after 100us. The
* square wave oscillator output is divided by 8 with a
* ripple counter. The result is passed through a digital
* filter to convert it to a sine wave.
*
.tran 1e-5 1e-3
*
v1 1 0 0.0 pulse(0 1 1e-4 1e-6)
r1 1 0 1k
*
abridge1 [1] [enable] atod
.model atod adc_bridge
*
aclk [enable clk] clk nand
.model nand d_nand (rise_delay=1e-5 fall_delay=1e-5)
*
adiv2 div2_out clk NULL NULL NULL div2_out dff
adiv4 div4_out div2_out NULL NULL NULL div4_out dff
adiv8 div8_out div4_out NULL NULL NULL div8_out dff
.model dff d_dff
```

Example (continued):

```
abridge2 div8_out enable filt_in node_bridge2
.model node_bridge2 d_to_real (zero=-1 one=1)
*
xfilter filt_in clk filt_out dig_filter
*
abridge3 filt_out a_out node_bridge3
.model node_bridge3 real_to_v
*
rlpf1 a_out oa_minus 10k
*
xlpf 0 oa_minus lpf_out opamp
*
rlpf2 oa_minus lpf_out 10k
clpf lpf_out oa_minus 0.01uF
*************************************
.subckt dig_filter filt_in clk filt_out
.model n0 real_gain (gain=1.0)
.model n1 real_gain (gain=2.0)
.model n2 real_gain (gain=1.0)
.model g1 real_gain (gain=0.125)
.model zm1 real_delay
.model d0a real_gain (gain=-0.75)
.model d1a real_gain (gain=0.5625)
.model d0b real_gain (gain=-0.3438)
.model d1b real_gain (gain=1.0)
*
an0a filt_in x0a n0
an1a filt_in x1a n1
an2a filt_in x2a n2
*
az0a x0a clk x1a zm1
az1a x1a clk x2a zm1
*
ad0a x2a x0a d0a
ad1a x2a x1a d1a
*
az2a x2a filt1_out g1
az3a filt1_out clk filt2_in zm1
*
an0b filt2_in x0b n0
an1b filt2_in x1b n1
an2b filt2_in x2b n2
*
az0b x0b clk x1b zm1
az1b x1b clk x2b zm1
*
ad0 x2b x0b d0b
ad1 x2b x1b d1b
*
az2b x2b clk filt_out zm1
.ends dig_filter
```

Example (continued):

```
.subckt opamp plus minus out
*
r1 plus minus 300k
a1 %vd (plus minus) outint lim
.model lim limit (out_lower_limit = -12 out_upper_limit = 12
+ fraction = true limit_range = 0.2 gain=300e3)
r3 outint out 50.0
r2 out 0 1e12
*
.ends opamp
*
.end
```

This circuit is a high-level design of a sampled-data filter. An analog step waveform (created from a ngspice "pulse" waveform) is introduced as "v1" and converted to digital by code model instance "abridge". This digital data is used to enable a Nand-Gate oscillator ("aclk") after a short delay. The Nand-Gate oscillator generates a square-wave clock signal with a period of approximately two times the gate delay, which is specified as 1e-5 seconds. This 50 KHz clock is divided by a series of D Flip Flops ("adiv2", "adiv4", "adiv8") to produce a square-wave at approximately 6.25 KHz. Note particularly the use of the reserved word "NULL" for certain nodes on the D Flip Flops. This tells the code model that there is no node connected to these ports of the flip flop.

The divide-by-8 and enable waveforms are converted by the instance "abridge2" to the format required by the User-Defined Node type "real", which expected real-valued data. The output of this instance on node "filt_in" is a real valued square wave which oscillates between values of -1 and 1. Note that the associated code model "d_to_real" is not part of the original XSPICE code model library but has been added later to ngspice.

This signal is then passed through subcircuit "xfilter" which contains a digital low-pass filter clocked by node "clk". The result of passing this square-wave through the digital low-pass filter is the production of a sampled sine wave (the filter passes only the fundamental of the square-wave input) on node "filt_out". This signal is then converted back to ngspice analog data on node "a_out" by node bridge instance "abridge3".

The resulting analog waveform is then passed through an op-amp-based low-pass analog filter constructed around subcircuit "xlpf" to produce the final output at analog node "lpf_out".

26.2.2 Running example C3

Now copy the file "xspice_c3.cir" from directory /examples/xspice/ into the current directory:

```
$ cp /examples/xspice/xspice_c3.cir xspice_c3.cir
```

and invoke the new simulator executable as you did in the previous examples.

```
$ ngspice xspice_c3.cir
```

Execute the simulation with the "run" command.

```
ngspice 1 -> run
```

After a short time, the ngspice prompt should return. Results of this simulation are examined in the manner illustrated in the previous two examples. You can use the "plot" command to plot either analog nodes, event-driven nodes, or both. For example, you can plot the values of the sampled-data filter input node and the analog low-pass filter output node as follows:

```
ngspice 2 -> plot filt_in lpf_out
```

The plot shown in Figure 26.2 should appear.

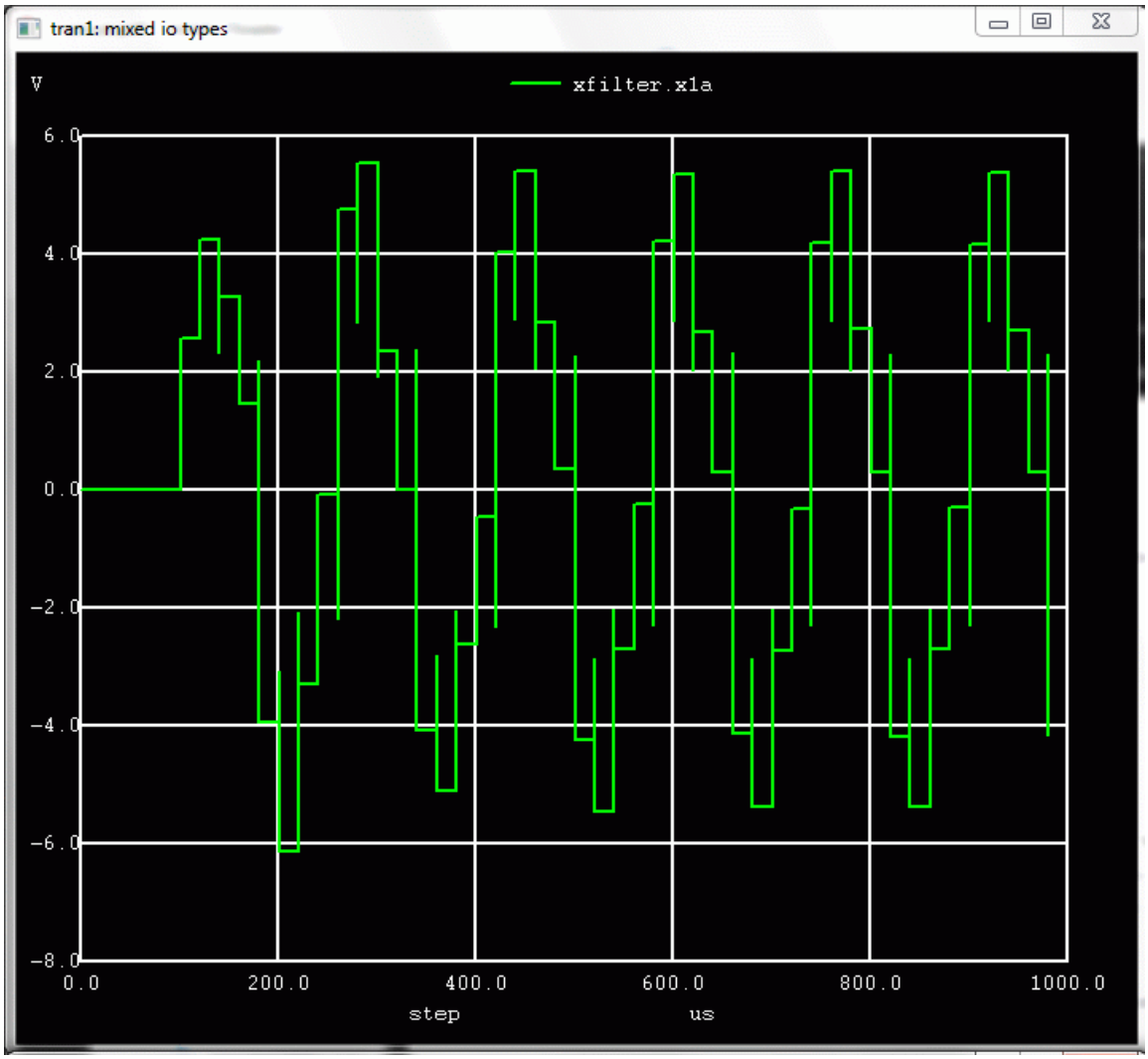

Figure 26.2: Nutmeg Plot of Filter Input and Output

You can also plot data from nodes inside a subcircuit. For example, to plot the data on node "x1a" in subcircuit "xfilter", create a pathname to this node with a dot separator.

```
ngspice 3 -> plot xfilter.x1a
```

The output from this command is shown in Figure 26.3. Note that the waveform contains vertical segments. These segments are caused by the non-zero delays in the "real gain" models used within the subcircuit. Each vertical segment is actually a step with a width equal to the model delay (1e-9 seconds).

Plotting nodes internal to subcircuits works for both analog and event-driven nodes.

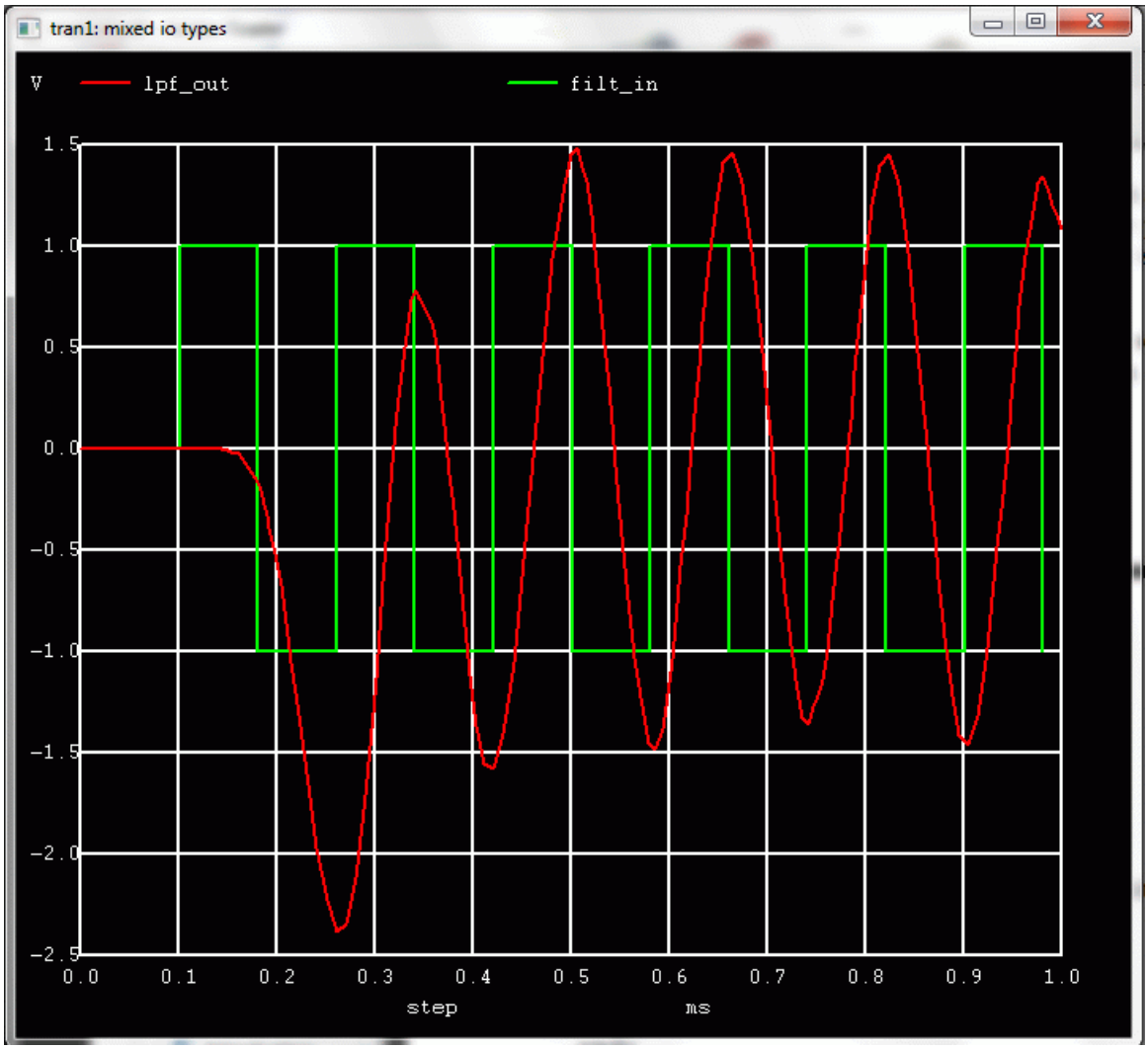

Figure 26.3: Nutmeg Plot of Subcircuit Internal Node

To examine data such as the closely spaced events inside the subcircuit at node "xfilter.x1a", it is often convenient to use the "eprint" command to produce a tabular listing of events. Try this by entering the following command:

```
ngspice 4 -> eprint xfilter.x1a
**** Results Data ****
Time or Step
xfilter.x1a
0.000000000e+000 0.000000e+000  1.010030000e-004 2.000000e+000
1.010040000e-004 2.562500e+000  1.210020000e-004 2.812500e+000
1.210030000e-004 4.253906e+000  1.410020000e-004 2.332031e+000
1.410030000e-004 3.283447e+000  1.610020000e-004 2.014893e+000
```

```
1.610030000e-004 1.469009e+000  1.810020000e-004 2.196854e+000
1.810030000e-004 1.176232e+000
...
9.610030000e-004 3.006294e-001  9.810020000e-004 2.304755e+000
9.810030000e-004 9.506230e-001  9.810090000e-004 -3.049377e+000
9.810100000e-004 -4.174377e+000
**** Messages ****
**** Statistics ****
Operating point analog/event alternations: 1
Operating point load calls: 37
Operating point event passes: 2
Transient analysis load calls: 4299
Transient analysis timestep backups: 87
```

This command produces a tabular listing of event-times in the first column and node values in the second column. The 1 ns delays can be clearly seen in the fifth decimal place of the event times.

Note that the eprint command also gives statistics from the event-driven algorithm portion of XSPICE. For this example, the simulator alternated between the analog solution algorithm and the event-driven algorithm one time while performing the initial DC operating point solution prior to the start of the transient analysis. During this operating point analysis, 37 total calls were made to event-driven code model functions, and two separate event passes or iterations were required before the event nodes obtained stable values. Once the transient analysis commenced, there were 4299 total calls to event-driven code model functions. Lastly, the analog simulation algorithm performed 87 time-step backups that forced the event-driven simulator to backup its state data and its event queues.

A similar output is obtained when printing the values of digital nodes. For example, print the values of the node "div8 out" as follows:

```
ngspice 5 -> eprint div8_out
**** Results Data ****
Time or Step
div8_out
0.000000000e+000 1s
1.810070000e-004 0s
2.610070000e-004 1s
...
9.010070000e-004 1s
9.810070000e-004 0s
**** Messages ****
**** Statistics ****
Operating point analog/event alternations: 1
Operating point load calls: 37
Operating point event passes: 2
Transient analysis load calls: 4299
Transient analysis timestep backups: 87
```

From this printout, we see that digital node values are composed of a two character string. The first character (0, 1, or U) gives the state of the node (logic zero, logic one, or unknown logic state). The second character (s, r, z, u) gives the "strength" of the logic state (strong, resistive, hi-impedance, or undetermined).

If you wish, examine other nodes in this circuit with either the plot or eprint commands. When you are done, enter the "quit" command to exit the simulator and return to the operating system prompt:

```
ngspice 6 -> quit
```

So long.

Chapter 27

Code Models and User-Defined Nodes

The following sections explain the steps required to create code models and User-Defined Nodes (UDNs), store them in shared libraries and load them into the simulator at runtime. The ngspice simulator already includes XSPICE libraries of predefined models and node types that span the analog and digital domains. These have been detailed earlier in this document (see Sections 12.2, 12.3, and 12.4). However, the real power of the XSPICE is in its support for extending these libraries with new models written by users. ngspice includes an XSPICE code model generator. Adding code models to ngspice will require a model definition plus some simple file operations, which are explained in this chapter.

The original manual cited an XSPICE "Code Model Toolkit" that enabled one to define new models and node data types to be passed between them offline, independent from ngspice. Whereas this Toolkit is still available in the original source code distribution at the XSPICE web page, it is neither required nor supported any more.

So we make use of the existing XSPICE infrastructure provided with ngspice to create new code models. With an 'intelligent' copy and paste, and the many available code models serving as a guide you will be quickly able to create your own models. You have to have a compiler (gcc) available under LINUX, MS Windows (Cygwin, MINGW), maybe also for other OSs, including supporting software (Flex, Bison, and the autotools if you start from CVS sources). The compilation procedures for ngspice are described in detail in chapter 31. Adding a code model may then require defining the functionality , interface, and eventually user defined nodes. Compiling into a shared library is only a simple 'make', loading the shared lib(s) into ngspice is done by the ngspice command **codemodel**... (see chapt. 17.5.10). This will allow you to either add some code model to an existing library, or you may generate a new library with your own code models. The latter is of interest if you want to distribute your code models independently from the ngspice sources or executables.

These new code models are handled by ngspice in a manner analogous to its treating of SPICE devices and XSPICE Predefined Code Models. The basic steps required to create sources for new code models or User-Defined Nodes, compile them and load them into ngspice are similar. They consist of 1) creating the code model or UserDefined Node (UDN) directory and its associated model or data files, 2) inform ngspice about which code model or UDN directories have to be compiled and linked into ngspice, 3) compile them into a shared lib, and 4) load them into the ngspice simulator upon runtime. All code models finally reside in dynamically linkable shared libraries (*.cm), which in fact are .so files under LINUX or dlls under MS Windows. Currently we have 5 of them (analog.cm, digital.cm, spice2poly.cm, xtradev.cm, xtraevt.cm).

Upon start up of ngspice they are dynamically loaded into the simulator by the ngspice **codemodel** command (which is located in file .spinit (see chapt. 16.5) for the standard code models). Once you have added your new code model into one of these libraries (or have created a new library file, e.g. my-own.cm), instances of the model can be placed into any simulator deck that describes a circuit of interest and simulated along with all of the other components in that circuit.

A quick entry to get a new code model has already been presented in chapter 25.3. You may find the details of the XSPICE language in chapters 27.6 ff.

27.1 Code Model Data Type Definitions

There are three data types which you can incorporate into a model and which have already been used extensively in the code model library included with the simulator. These are detailed below:

Boolean_t The Boolean type is an enumerated type which can take on values of FALSE (integer value 0) or TRUE (integer value 1). Alternative names for these enumerations are MIF FALSE and MIF TRUE, respectively.

Complex_t The Complex type is a structure composed of two double values. The first of these is the .real type, and the second is the .imag type. Typically these values are accessed as shown:

For complex value "data", the real portion is "data.real", and the imaginary portion is "data.imag".

Digital_State_t The Digital State type is an enumerated value which can be either ZERO (integer value 0), ONE (integer value 1), or UNKNOWN (integer value 2).

Digital_Strength_t The Digital Strength type is an enumerated value which can be either STRONG (integer value 0), RESISTIVE (integer value 1), HI IMPEDANCE (integer value 2) or UNDETERMINED (integer value 3).

Digital_t The Digital type is a composite of the Digital_State_t and Digital_Strength_t enumerated data types. The actual variable names within the Digital type are .state and .strength and are accessed as shown below:

For Digital_t value "data", the state portion is "data.state", and the strength portion is "data.strength".

27.2 Creating Code Models

The following description deals with extending one of the five existing code model libraries. Adding a new library is described in chapter 27.4. The first step in creating a new code model within XSPICE is to create a model directory inside of the selected library directory. The new directory name is the name of the new code model. As an example you may add a directory **d_counter** to the library directory **digital**.

```
cd ng-spice-rework/src/xspice/icm/digital
mkdir d_counter
```

Into this new directory you copy the following template files:

- Interface Specification File (ifspec.ifs)
- Model Definition File (cfunc.mod)

You may choose any of the existing files which are similar to the new code model you intend to integrate. The template Interface Specification File (ifspec.ifs) is edited to define the model's inputs, outputs, parameters, etc (see chapt. 27.6). You then edit the template Model Definition File (cfunc.mod) to include the C-language source code that defines the model behavior (see chapt. 27.7). As a final step you have to notify ngspice of the new code model. You have to edit the file **modpath.lst** which resides in the library directory ng-spice-rework/src/xspice/icm/digital. Just add the entry **d_counter** to this file.

The Interface Specification File is a text file that describes, in a tabular format, information needed for the code model to be properly interpreted by the simulator when it is placed with other circuit components into a SPICE deck. This information includes such things as the parameter names, parameter default values, and the name of the model itself. The specific format presented to you in the Interface Specification File template must be followed exactly, but is quite straightforward. A detailed description of the required syntax, along with numerous examples, is included in Section 27.6.

The Model Definition File contains a C programming language function definition. This function specifies the operations to be performed within the model on the data passed to it by the simulator. Special macros are provided that allow the function to retrieve input data and return output data. Similarly, macros are provided to allow for such things as storage of information between iteration time-points and sending of error messages. Section 27.7 describes the form and function of the Model Definition File in detail and lists the support macros provided within the simulator for use in code models.

To allow compiling and linking (see chapt. 27.5) you have at least to adapt the names of the functions inside of the two copied files to get unique function and model names. If for example you have chosen ifspec.ifs and cfunc.mod from model d_fdiv as your template, simply replace all entries **d_fdiv** by **d_counter** inside of the two files.

27.3 Creating User-Defined Nodes

In addition to providing the capability of adding new models to the simulator, a facility exists which allows node types other than those found in standard SPICE to be created. Models may be constructed which pass information back and forth via these nodes. Such models are constructed in the manner described in the previous sections, with appropriate changes to the Interface Specification and Model Definition Files.

Because of the need of electrical engineers to have ready access to both digital and analog simulation capabilities, the "digital" node type is provided as a built-in node type along with standard SPICE analog nodes. For "digital" nodes, extensive support is provided in the form

of macros and functions so that you can treat this node type as a standard type analogous to standard SPICE analog nodes when creating and using code models. In addition to "analog" and "digital" nodes, the node types "real" and "int" are also provided with the simulator. These were created using the User-Defined Node (UDN) creation facilities described below and may serve as a template for further node types.

The first step in creating a new node type within XSPICE is to set up a node type directory along with the appropriate template files needed.

```
cd ng-spice-rework/src/xspice/icm/xtraevt
mkdir <directory name>
```

<directory name> should be the name of the new type to be defined. Copy file udnfunc.c from /icm/xtraevt/int into the new directory. Edit this file according to the new type you want to create.

Notify ngspice about this new UDN directory by editing ng-spice-rework/src/xspice/icm/xtraevt/udnpath.lst. Add a new line containing <directory name>. For compiling and linking see chapt. 27.5.

The UDN Definition File contains a set of C language functions. These functions perform operations such as allocating space for data structures, initializing them, and comparing them to each other. Section 27.8 describes the form and function of the User-Defined Node Definition File in detail and includes an example UDN Definition File.

27.4 Adding a new code model library

A group of code models may be assembled into a library. A new library is a means to distribute new code models, independently from the existing ones. This is the way to generate a new code model library:

```
cd ng-spice-rework/src/xspice/icm/
mkdir <directory name>
```

<directory name> is the name of the new library. Copy empty files modpath.lst and udnpath.lst into this directory.

Edit file ng-spice-rework/src/xspice/icm/GNUmakefile.in, add <directory name> to the end of line 10, which starts with CMDIRS = ...

That's all you have to do about a new library! Of course it is empty right now, so you have to define at least one code model according to the procedure described in chapt. 27.2.

27.5 Compiling and loading the new code model (library)

Compiling is now as simple as issuing the commands

```
cd ng-spice-rework/release
make
sudo make install
```

if you have installed ngspice according to chapter 31.1.5. This procedure will install the code model libraries into a directory <prefix>/lib/spice/, e.g. C:/Spice/lib/spice/ for standard Windows install or /usr/local/lib/spice/ for LINUX.

Thus the code model libraries are not linked into ngspice at compile time, by may be loaded at runtime using the **codemodel** command (see chapt. 17.5.10). This is done automatically for the predefined code model libraries upon starting ngspice. The appropriate commands are provided in the start up file spinit (see chapt. 16.5). So if you have added a new code model inside of one of the existing libraries, nothing has to be done, you will have immediate access to your new model.

If you have generated a new code model library, e.g. new_lib.cm, then you have to add the line

```
@XSPICEINIT@ codemodel @prefix@/@libname@/spice/new_lib.cm
```

to spinit.in in ng-spice-rework/src. This will create a new spinit if ngspice is recompiled from scratch.

To avoid the need for recompilation of ngspice, you also may directly edit the file spinit by adding the line

```
codemodel C:/Spice/lib/spice/new_lib.cm
```

(OS MS Windows) or the appropriate LINUX equivalent. Upon starting ngspice, the new library will be loaded and you have access to the new code model(s). The **codemodel** command has to be executed upon start-up of ngspice, so that the model information is available as soon as the circuit is parsed. Failing to do so will lead to an error message of a model missing. So spinit (or .spiceinit for personal code model libraries) is the correct place for **codemodel**.

27.6 Interface Specification File

The Interface Specification (IFS) file is a text file that describes the model's naming information, its expected input and output ports, its expected parameters, and any variables within the model that are to be used for storage of data across an entire simulation. These four types of data are described to the simulator in IFS file sections labeled NAME TABLE, PORT TABLE, PARAMETER TABLE and STATIC VAR TABLE, respectively. An example IFS file is given below. The example is followed by detailed descriptions of each of the entries, what they signify, and what values are acceptable for them. Keywords are case insensitive.

```
NAME_TABLE:
C_Function_Name:    ucm_xfer
Spice_Model_Name:   xfer
Description:        "arbitrary transfer function"
```

```
PORT_TABLE:
Port_Name:          in              out
Description:        "input"         "output"
Direction:          in              out
Default_Type:       v               v
Allowed_Types:      [v,vd,i,id]     [v,vd,i,id]
Vector: no no
Vector_Bounds:      -               -
Null_Allowed:       no              no
PARAMETER_TABLE:
Parameter_Name:     in_offset       gain
Description:        "input offset" "gain"
Data_Type:          real            real
Default_Value:      0.0             1.0
Limits:             -               -
Vector:             no              no
Vector_Bounds:      -               -
Null_Allowed:       yes             yes
PARAMETER_TABLE:
Parameter_Name:     num_coeff
Description:        "numerator polynomial coefficients"
Data_Type:          real
Default_Value:      -
Limits:             -
Vector:             yes
Vector_Bounds:      [1 -]
Null_Allowed:       no
PARAMETER_TABLE:
Parameter_Name:     den_coeff
Description:        "denominator polynomial coefficients"
Data_Type:          real
Default_Value:      -
Limits:             -
Vector:             yes
Vector_Bounds:      [1 -]
Null_Allowed:       no
PARAMETER_TABLE:
Parameter_Name:     int_ic
Description:        "integrator stage initial conditions"
Data_Type:          real
Default_Value:      0.0
Limits:             -
Vector:             yes
Vector_Bounds:      den_coeff
Null_Allowed:       yes
STATIC_VAR_TABLE:
Static_Var_Name:    x
Data_Type:          pointer
```

```
Description:        "x-coefficient array"
```

27.6.1 The Name Table

The name table is introduced by the "Name_Table:" keyword. It defines the code model's C function name, the name used on a .MODEL card, and an optional textual description. The following sections define the valid fields that may be specified in the Name Table.

27.6.1.1 C Function Name

The C function name is a valid C identifier which is the name of the function for the code model. It is introduced by the "C_Function_Name:" keyword followed by a valid C identifier. To reduce the chance of name conflicts, it is recommended that user-written code model names use the prefix "ucm_" for this entry. Thus, in the example given above, the model name is "xfer", but the C function is "ucm_xfer". Note that when you subsequently write the model function in the Model Definition File, this name must agree with that of the function (i.e., "ucm_xfer"), or an error will result in the linking step.

27.6.1.2 SPICE Model Name

The SPICE model name is a valid SPICE identifier that will be used on SPICE .MODEL cards to refer to this code model. It may or may not be the same as the C function name. It is introduced by the "Spice_Model_Name:" keyword followed by a valid SPICE identifier.

Description The description string is used to describe the purpose and function of the code model. It is introduced by the "Description:" keyword followed by a C string literal.

27.6.2 The Port Table

The port table is introduced by the "Port_Table:" keyword. It defines the set of valid ports available to the code model. The following sections define the valid fields that may be specified in the port table.

27.6.2.1 Port Name

The port name is a valid SPICE identifier. It is introduced by the "Port_Name:" keyword followed by the name of the port. Note that this port name will be used to obtain and return input and output values within the model function. This will be discussed in more detail in the next section.

27.6.2.2 Description

The description string is used to describe the purpose and function of the code model. It is introduced by the "Description:" keyword followed by a C string literal.

Default Types		
Type	Description	Valid Directions
d	digital	in or out
g	conductance (VCCS)	inout
gd	differential conductance (VCCS)	inout
h	resistance (CCVS)	inout
hd	differential resistance (CCVS)	inout
i	current	in or out
id	differential current	in or out
v	voltage	in or out
vd	differential voltage	in or out
<identifier>	user-defined type	in or out

Table 27.1: Port Types

27.6.2.3 Direction

The direction of a port specifies the data flow direction through the port. A direction must be one of "in", "out", or "inout". It is introduced by the "Direction:" keyword followed by a valid direction value.

27.6.2.4 Default Type

The Default_Type field specifies the type of a port. These types are identical to those used to define the port types on a SPICE deck instance card (see Table 12.1), but without the percent sign (%) preceding them. Table 27.1 summarizes the allowable types.

27.6.2.5 Allowed Types

A port must specify the types it is allowed to assume. An allowed type value must be a list of type names (a blank or comma separated list of names delimited by square brackets, e.g. "[v vd i id]" or "[d]"). The type names must be taken from those listed in Table 27.1.

27.6.2.6 Vector

A port which is a vector can be thought of as a bus. The Vector field is introduced with the "Vector:" keyword followed by a Boolean value: "YES", "TRUE", "NO" or "FALSE".

The values "YES" and "TRUE" are equivalent and specify that this port is a vector. Likewise, "NO" and "FALSE" specify that the port is not a vector. Vector ports must have a corresponding vector bounds field that specifies valid sizes of the vector port.

27.6.2.7 Vector Bounds

If a port is a vector, limits on its size must be specified in the vector bounds field. The Vector Bounds field specifies the upper and lower bounds on the size of a vector. The Vector Bounds

field is usually introduced by the “Vector_Bounds:” keyword followed by a range of integers (e.g. “[1 7]” or “[3, 20]”). The lower bound of the vector specifies the minimum number of elements in the vector; the upper bound specifies the maximum number of elements. If the range is unconstrained, or the associated port is not a vector, the vector bounds may be specified by a hyphen (“-”). Using the hyphen convention, partial constraints on the vector bound may be defined (e.g., “[2, -]” indicates that the least number of port elements allowed is two, but there is no maximum number).

27.6.2.8 Null Allowed

In some cases, it is desirable to permit a port to remain unconnected to any electrical node in a circuit. The Null_Allowed field specifies whether this constitutes an error for a particular port. The Null_Allowed field is introduced by the “Null_Allowed:” keyword and is followed by a boolean constant: “YES”, “TRUE”, “NO” or “FALSE”. The values “YES” and “TRUE” are equivalent and specify that it is legal to leave this port unconnected. “NO” or “FALSE” specify that the port must be connected.

27.6.3 The Parameter Table

The parameter table is introduced by the “Parameter_Table:” keyword. It defines the set of valid parameters available to the code model. The following sections define the valid fields that may be specified in the parameter table.

27.6.3.1 Parameter Name

The parameter name is a valid SPICE identifier which will be used on SPICE .MODEL cards to refer to this parameter. It is introduced by the “Parameter_Name:” keyword followed by a valid SPICE identifier.

27.6.3.2 Description

The description string is used to describe the purpose and function of the parameter. It is introduced by the “Description:” keyword followed by a string literal.

27.6.3.3 Data Type

The parameter’s data type is specified by the Data Type field. The Data Type field is introduced by the keyword “Data_Type:” and is followed by a valid data type. Valid data types include boolean, complex, int, real, and string.

27.6.3.4 Null Allowed

The Null_Allowed field is introduced by the “Null_Allowed:” keyword and is followed by a boolean literal. A value of “TRUE” or “YES” specify that it is valid for the corresponding SPICE .MODEL card to omit a value for this parameter. If the parameter is omitted, the default

value is used. If there is no default value, an undefined value is passed to the code model, and the PARAM_NULL( ) macro will return a value of "TRUE" so that defaulting can be handled within the model itself. If the value of Null_Allowed is "FALSE" or "NO", then the simulator will flag an error if the SPICE .MODEL card omits a value for this parameter.

27.6.3.5 Default Value

If the Null_Allowed field specifies "TRUE" for this parameter, then a default value may be specified. This value is supplied for the parameter in the event that the SPICE .MODEL card does not supply a value for the parameter. The default value must be of the correct type. The Default Value field is introduced by the "Default_Value:" keyword and is followed by a numeric, boolean, complex, or string literal, as appropriate.

27.6.3.6 Limits

Integer and real parameters may be constrained to accept a limited range of values. The following range syntax is used whenever such a range of values is required. A range is specified by a square bracket followed by a value representing a lower bound separated by space from another value representing an upper bound and terminated with a closing square bracket (e.g."[0 10]"). The lower and upper bounds are inclusive. Either the lower or the upper bound may be replaced by a hyphen ("-") to indicate that the bound is unconstrained (e.g. "[10 -]" is read as "the range of values greater than or equal to 10"). For a totally unconstrained range, a single hyphen with no surrounding brackets may be used. The parameter value limit is introduced by the "Limits:" keyword and is followed by a range.

27.6.3.7 Vector

The Vector field is used to specify whether a parameter is a vector or a scalar. Like the PORT TABLE Vector field, it is introduced by the "Vector:" keyword and followed by a boolean value. "TRUE" or "YES" specify that the parameter is a vector. "FALSE" or "NO" specify that it is a scalar.

27.6.3.8 Vector Bounds

The valid sizes for a vector parameter are specified in the same manner as are port sizes (see Section 27.6.2.7). However, in place of using a numeric range to specify valid vector bounds it is also possible to specify the name of a port. When a parameter's vector bounds are specified in this way, the size of the vector parameter must be the same as the associated vector port.

27.6.4 Static Variable Table

The Static Variable table is introduced by the "Static_Var_Table:" keyword. It defines the set of valid static variables available to the code model. These are variables whose values are retained between successive invocations of the code model by the simulator. The following sections define the valid fields that may be specified in the Static Variable Table.

27.6.4.1 Name

The Static variable name is a valid C identifier that will be used in the code model to refer to this static variable. It is introduced by the "Static_Var_Name:" keyword followed by a valid C identifier.

27.6.4.2 Description

The description string is used to describe the purpose and function of the static variable. It is introduced by the "Description:" keyword followed by a string literal.

27.6.4.3 Data Type

The static variable's data type is specified by the Data Type field. The Data Type field is introduced by the keyword "Data_Type:" and is followed by a valid data type. Valid data types include boolean, complex, int, real, string and pointer.

Note that pointer types are used to specify vector values; in such cases, the allocation of memory for vectors must be handled by the code model through the use of the malloc() or calloc() C function. Such allocation must only occur during the initialization cycle of the model (which is identified in the code model by testing the INIT macro for a value of TRUE). Otherwise, memory will be unnecessarily allocated each time the model is called.

Following is an example of the method used to allocate memory to be referenced by a static pointer variable "x" and subsequently use the allocated memory. The example assumes that the value of "size" is at least 2, else an error would result. The references to `STATIC_VAR(x)` that appear in the example illustrate how to set the value of, and then access, a static variable named "x". In order to use the variable "x" in this manner, it must be declared in the Static Variable Table of the code model's Interface Specification File.

```
/* Define local pointer variable */
double *local.x;

/* Allocate storage to be referenced by the static variable x. */
/* Do this only if this is the initial call of the code model. */
if (INIT == TRUE) {
    STATIC_VAR(x) = calloc(size, sizeof(double));
}

/* Assign the value from the static pointer value to the local */
/* pointer variable. */
local_x = STATIC_VAR(x);

/* Assign values to first two members of the array */
local_x[0] = 1.234;
local_x[1] = 5.678;
```

27.7 Model Definition File

The Model Definition File is a C source code file that defines a code model's behavior given input values which are passed to it by the simulator. The file itself is always given the name "cfunc.mod". In order to allow for maximum flexibility, passing of input, output, and simulator-specific information is handled through accessor macros, which are described below. In addition, certain predefined library functions (e.g. smoothing interpolators, complex arithmetic routines) are included in the simulator in order to ease the burden of the code model programmer. These are also described below.

27.7.1 Macros

The use of the accessor macros is illustrated in the following example. Note that the argument to most accessor macros is the name of a parameter or port as defined in the Interface Specification File. Note also that all accessor macros except "ARGS" resolve to an lvalue (C language terminology for something that can be assigned a value). Accessor macros do not implement expressions or assignments.

```
void code.model(ARGS) /* private structure accessed by
                         accessor macros
*/
{
 /* The following code fragments are intended to show how
*/
 /* information in the argument list is accessed. The reader
*/
 /* should not attempt to relate one fragment to another.
*/
 /* Consider each fragment as a separate example.
*/

   double p,/* variable for use in the following code fragments */
       x,   /* variable for use in the following code fragments */
       y;   /* variable for use in the following code fragments */


   int i,   /* indexing variable for use in the following
*/
       j;   /* indexing variable for use in the following
*/

   UDN_Example_Type *a_ptr, /* A pointer used to access a User-
                               Defined Node type */
                    *y_ptr; /* A pointer used to access a User-
                               Defined Node type */

   /* Initializing and outputting a User-Defined Node result */
```

```
   if(INIT) {
      OUTPUT(y) = malloc(sizeof(user.defined.struct));
      y_ptr = OUTPUT(y);
      y_ptr->component1 = 0.0;
      y_ptr->component2 = 0.0;
   }
   else {
      y_ptr = OUTPUT(y);
      y_ptr->component1 = x1;
      y_ptr->component2 = x2;
   }

   /* Determining analysis type */
   if(ANALYSIS == AC) {
       /* Perform AC analysis-dependent operations here */
   }

   /* Accessing a parameter value from the .model card */
   p = PARAM(gain);

   /* Accessing a vector parameter from the .model card */
   for(i = 0; i < PARAM_SIZE(in_offset); i++)
      p = PARAM(in_offset[i]);

   /* Accessing the value of a simple real-valued input */
   x = INPUT(a);

   /* Accessing a vector input and checking for null port */
   if( ! PORT_NULL(a))
      for(i = 0; i < PORT_SIZE(a); i++)
         x = INPUT(a[i]);

   /* Accessing a digital input */
   x = INPUT(a);

   /* Accessing the value of a User-Defined Node input...
*/
   /* This node type includes two elements in its definition. */
   a_ptr = INPUT(a);
   x = a_ptr->component1;
   y = a_ptr->component2;

   /* Outputting a simple real-valued result */
   OUTPUT(out1) = 0.0;

   /* Outputting a vector result and checking for null */
   if( ! PORT_NULL(a))
      for(i = 0; i < PORT.SIZE(a); i++)
```

```
            OUTPUT(a[i]) = 0.0;

    /* Outputting the partial of output out1 w.r.t. input a */
    PARTIAL(out1,a) = PARAM(gain);

   /* Outputting the partial of output out2(i) w.r.t. input b(j) */
    for(i = 0; i < PORT_SIZE(out2); i++) {
       for(j = 0; j < PORT_SIZE(b); j++) {
          PARTIAL(out2[i],b[j]) = 0.0;
       }
    }

   /* Outputting gain from input c to output out3 in an
      AC analysis */
    complex_gain_real = 1.0;
    complex_gain_imag = 0.0;
    AC_GAIN(out3,c) = complex_gain;

    /* Outputting a digital result */
    OUTPUT_STATE(out4) = ONE;

    /* Outputting the delay for a digital or user-defined output */
    OUTPUT_DELAY(out5) = 1.0e-9;
}
```

27.7.1.1 Macro Definitions

The full set of accessor macros is listed below. Arguments shown in parenthesis are examples only. Explanations of the accessor macros are provided in the subsections below.

```
Circuit Data:
    ARGS
    CALL_TYPE
    INIT
    ANALYSIS
    FIRST_TIMEPOINT
    TIME
    T(n)
    RAD_FREQ
    TEMPERATURE
Parameter Data:
    PARAM(gain)
    PARAM_SIZE(gain)
    PARAM_NULL(gain)
Port Data:
    PORT_SIZE(a)
    PORT_NULL(a)
```

```
    LOAD(a)
    TOTAL_LOAD(a)
Input Data:
    INPUT(a)
    INPUT_STATE(a)
    INPUT_STRENGTH(a)
Output Data:
    OUTPUT(y)
    OUTPUT_CHANGED(a)
    OUTPUT_DELAY(y)
    OUTPUT_STATE(a)
    OUTPUT_STRENGTH(a)
Partial Derivatives:
    PARTIAL(y,a)
AC Gains:
    AC_GAIN(y,a)
Static Variable:
    STATIC_VAR(x)
```

27.7.1.2 Circuit Data

```
ARGS
CALL_TYPE
INIT
ANALYSIS
FIRST_TIMEPOINT
TIME
T(n)
RAD_FREQ
TEMPERATURE
```

ARGS is a macro which is passed in the argument list of every code model. It is there to provide a way of referencing each model to all of the remaining macro values. It must be present in the argument list of every code model; it must also be the only argument present in the argument list of every code model.

CALL_TYPE is a macro which returns one of two possible symbolic constants. These are EVENT and ANALOG. Testing may be performed by a model using CALL TYPE to determine whether it is being called by the analog simulator or the event-driven simulator. This will, in general, only be of value to a hybrid model such as the adc bridge or the dac bridge.

INIT is an integer (int) that takes the value 1 or 0 depending on whether this is the first call to the code model instance or not, respectively.

ANALYSIS is an enumerated integer that takes values of DC, AC, or TRANSIENT. FIRST TIMEPOINT is an integer that takes the value 1 or 0 depending on whether this is the first call for this instance at the current analysis step (i.e., time-point) or not, respectively.

TIME is a double representing the current analysis time in a transient analysis. T(n) is a double vector giving the analysis time for a specified time-point in a transient analysis, where n takes the value 0 or 1. T(0) is equal to TIME. T(1) is the last accepted time-point. (T(0) - T(1)) is the time-step (i.e., the delta-time value) associated with the current time.

RAD_FREQ is a double representing the current analysis frequency in an AC analysis expressed in units of radians per second.

TEMPERATURE is a double representing the current analysis temperature.

27.7.1.3 Parameter Data

```
PARAM(gain)
PARAM_SIZE(gain)
PARAM_NULL(gain)
```

PARAM(gain) resolves to the value of the scalar (i.e., non-vector) parameter "gain" which was defined in the Interface Specification File tables. The type of "gain" is the type given in the ifspec.ifs file. The same accessor macro can be used regardless of type. If "gain" is a string, then PARAM(gain) would resolve to a pointer. PARAM(gain[n]) resolves to the value of the nth element of a vector parameter "gain".

PARAM_SIZE(gain) resolves to an integer (int) representing the size of the "gain" vector (which was dynamically determined when the SPICE deck was read). PARAM_SIZE(gain) is undefined if gain is a scalar.

PARAM_NULL(gain) resolves to an integer with value 0 or 1 depending on whether a value was specified for gain, or whether the value is defaulted, respectively.

27.7.1.4 Port Data

```
PORT_SIZE(a)
PORT_NULL(a)
LOAD(a)
TOTAL_LOAD(a)
```

PORT_SIZE(a) resolves to an integer (int) representing the size of the "a" port (which was dynamically determined when the SPICE deck was read). PORT_SIZE(a) is undefined if gain is a scalar.

PORT_NULL(a) resolves to an integer (int) with value 0 or 1 depending on whether the SPICE deck has a node specified for this port, or has specified that the port is null, respectively.

LOAD(a) is used in a digital model to post a capacitive load value to a particular input or output port during the INIT pass of the simulator. All values posted for a particular event-driven node using the LOAD() macro are summed, producing a total load value which

TOTAL_LOAD(a) returns a double value which represents the total capacitive load seen on a specified node to which a digital code model is connected. This information may be used after the INIT pass by the code model to modify the delays it posts with its output states and strengths. Note that this macro can also be used by non-digital event-driven code models (see LOAD(), above).

27.7.1.5 Input Data

```
INPUT(a)
INPUT_STATE(a)
INPUT_STRENGTH(a)
```

INPUT(a) resolves to the value of the scalar input "a" that was defined in the Interface Specification File tables ("a" can be either a scalar port or a port value from a vector; in the latter case, the notation used would be "a[i]", where "i" is the index value for the port). The type of "a" is the type given in the ifspec.ifs file. The same accessor macro can be used regardless of type.

INPUT_STATE(a) resolves to the state value defined for digital node types. These will be one of the symbolic constants ZERO, ONE, or UNKNOWN.

INPUT_STRENGTH(a) resolves to the strength with which a digital input node is being driven. This is determined by a resolution algorithm which looks at all outputs to a node and determines its final driven strength. This value in turn is passed to a code model when requested by this macro. Possible strength values are:
1. STRONG
2. RESISTIVE
3. HI_IMPEDANCE
4. UNDETERMINED

27.7.1.6 Output Data

```
OUTPUT(y)
OUTPUT_CHANGED(a)
OUTPUT_DELAY(y)
OUTPUT_STATE(a)
OUTPUT_STRENGTH(a)
```

OUTPUT(y) resolves to the value of the scalar output "y" that was defined in the Interface Specification File tables. The type of "y" is the type given in the ifspec.ifs file. The same accessor macro can be used regardless of type. If "y" is a vector, then OUTPUT(y) would resolve to a pointer.

OUTPUT_CHANGED(a) may be assigned one of two values for any particular output from a digital code model. If assigned the value TRUE (the default), then an output state, strength and delay must be posted by the model during the call. If, on the other hand, no change has occurred during that pass, the OUTPUT_CHANGED(a) value for an output can be set to FALSE. In this case, no state, strength or delay values need subsequently be posted by the model. Remember that this macro applies to a single output port. If a model has multiple outputs that have not changed, OUTPUT_CHANGED(a) must be set to FALSE for each of them.

OUTPUT_DELAY(y) may be assigned a double value representing a delay associated with a particular digital or User-Defined Node output port. Note that this macro must be set for each digital or User-Defined Node output from a model during each pass, unless the

OUTPUT_CHANGED(a) macro is invoked (see above). Note also that a non-zero value must be assigned to OUTPUT_DELAY(). Assigning a value of zero (or a negative value) will cause an error.

OUTPUT_STATE(a) may be assigned a state value for a digital output node. Valid values are ZERO, ONE, and UNKNOWN. This is the normal way of posting an output state from a digital code model.

OUTPUT_STRENGTH(a) may be assigned a strength value for a digital output node. This is the normal way of posting an output strength from a digital code model. Valid values are:
1. STRONG
2. RESISTIVE
3. HI_IMPEDANCE
4. UNDETERMINED

27.7.1.7 Partial Derivatives

```
PARTIAL(y,a)
PARTIAL(y[n],a)
PARTIAL(y,a[m])
PARTIAL(y[n],a[m])
```

PARTIAL(y,a) resolves to the value of the partial derivative of scalar output "y" with respect to scalar input "a". The type is always double since partial derivatives are only defined for nodes with real valued quantities (i.e., analog nodes).

The remaining uses of PARTIAL are shown for the cases in which either the output, the input, or both are vectors.

Partial derivatives are required by the simulator to allow it to solve the non-linear equations that describe circuit behavior for analog nodes. Since coding of partial derivatives can become difficult and error-prone for complex analog models, you may wish to consider using the cm analog auto partial() code model support function instead of using this macro.

27.7.1.8 AC Gains

```
AC_GAIN(y,a)
AC_GAIN(y[n],a)
AC_GAIN(y,a[m])
AC_GAIN(y[n],a[m])
```

AC_GAIN(y,a) resolves to the value of the AC analysis gain of scalar output "y" from scalar input "a". The type is always a structure ("Complex_t") defined in the standard code model header file:

```
typedef struct Complex_s {
double real; /* The real part of the complex number */
double imag; /* The imaginary part of the complex number */
}Complex_t;
```

The remaining uses of AC_GAIN are shown for the cases in which either the output, the input, or both are vectors.

27.7.1.9 Static Variables

```
STATIC_VAR(x)
```

STATIC_VAR(x) resolves to an lvalue or a pointer which is assigned the value of some scalar code model result or state defined in the Interface Spec File tables, or a pointer to a value or a vector of values. The type of "x" is the type given in the Interface Specification File. The same accessor macro can be used regardless of type since it simply resolves to an lvalue. If "x" is a vector, then STATIC_VAR(x) would resolve to a pointer. In this case, the code model is responsible for allocating storage for the vector and assigning the pointer to the allocated storage to STATIC_VAR(x).

27.7.1.10 Accessor Macros

Table 27.3 describes the accessor macros available to the Model Definition File programmer and their C types. The PARAM and STATIC_VAR macros, whose types are labeled CD (context dependent), return the type defined in the Interface Specification File. Arguments listed with "[i]" take an optional square bracket delimited index if the corresponding port or parameter is a vector. The index may be any C expression - possibly involving calls to other accessor macros (e.g.," `OUTPUT(out[PORT_SIZE(out)-1])`")

Name	Type	Args	Description
AC_GAIN	Complex_t	y[i],x[i]	AC gain of output y with respect to input x.
ANALYSIS	enum	<none>	Type of analysis: DC, AC, TRANSIENT.
ARGS	Mif_Private_t	<none>	Standard argument to all code model function.
CALL_TYPE	enum	<none>	Type of model evaluation call: ANALOG or EVENT.
INIT	Boolean_t	<none>	Is this the first call to the model?
INPUT	double or void*	name[i]	Value of analog input port, or value of structure pointer for User-Defined Node port.
INPUT_STATE	enum	name[i]	State of a digital input: ZERO, ONE, or UNKNOWN.
INPUT_STRENGHT	enum	name[i]	Strength of digital input: STRONG, RESISTIVE, HI IMPEDANCE, or UNDETERMINED.
INPUT_TYPE	char*	name[i]	The port type of the input.
LOAD	double	name[i]	The digital load value placed on a port by this model.

Table 27.3: Accessor macros

MESSAGE	char*	name[i]	A message output by a model on an event-driven node.
OUTPUT	double or void*	name[i]	Value of the analog output port or value of structure pointer for User-Defined Node port.
OUTPUT_CHANGED	Boolean_t	name[i]	Has a new value been assigned to this event-driven output by the model?
OUTPUT_DELAY	double	name[i]	Delay in seconds for an event-driven output.
OUTPUT_STATE	enum	name[i]	State of a digital output: ZERO, ONE, or UNKNOWN.
OUTPUT_STRENGTH	enum	name[i]	Strength of digital output: STRONG, RESISTIVE, HI_IMPEDANCE, or UNDETERMINED.
OUTPUT_TYPE	char*	name[i]	The port type of the output.
PARAM	CD	name[i]	Value of the parameter.
PARAM_NULL	Boolean_t	name[i]	Was the parameter not included on the SPICE .model card ?
PARAM_SIZE	int	name	Size of parameter vector.
PARTIAL	double	y[i],x[i]	Partial derivative of output y with respect to input x.
PORT_NULL	Mif_Boolean_t	name	Has this port been specified as unconnected?
PORT_SIZE	int	name	Size of port vector.
RAD_FREQ	double	<none>	Current analysis frequency in radians per second.
STATIC_VAR	CD	name	Value of a static variable.
STATIC_VAR_SIZE	int	name	Size of static var vector (currently unused).
T(n)	int	index	Current and previous analysis times (T(0) = TIME = current analysis time, T(1) = previous analysis time).
TEMPERATURE	double	<none>	Current analysis temperature.
TIME	double	<none>	Current analysis time (same as T(0)).
TOTAL_LOAD	double	name[i]	The total of all loads on the node attached to this event driven port.

27.7.2 Function Library

27.7.2.1 Overview

Aside from the accessor macros, the simulator also provides a library of functions callable from within code models. The header file containing prototypes to these functions is automatically inserted into the Model Definition File for you. The complete list of available functions follows:

```
Smoothing Functions:
    void cm_smooth_corner
    void cm_smooth_discontinuity
    double cm_smooth_pwl
Model State Storage Functions:
    void cm_analog_alloc
    void cm_event_alloc
    void *cm_analog_get_ptr
    void *cm_event_get_ptr
Integration and Convergence Functions:
    int cm_analog_integrate
    int cm_analog_converge
    void cm_analog_not_converged
    void cm_analog_auto_partial
    double cm_analog_ramp_factor
Message Handling Functions:
    char *cm_message_get_errmsg
    void cm_message_send
Breakpoint Handling Functions:
    int cm_analog_set_temp_bkpt
    int cm_analog_set_perm_bkpt
    int cm_event_queue
Special Purpose Functions:
    void cm_climit_fcn
    double cm_netlist_get_c
    double cm_netlist_get_l
Complex Math Functions:
    complex_t cm_complex_set
    complex_t cm_complex_add
    complex_t cm_complex_sub
    complex_t cm_complex_mult
    complex_t cm_complex_div
```

27.7.2.2 Smoothing Functions

```
void
cm_smooth_corner(x_input, x_center, y_center, domain,
                 lower_slope, upper_slope, y_output, dy_dx)

    double x_input;     /* The value of the x input */
```

```
    double x_center;    /* The x intercept of the two slopes */
    double y_center;    /* The y intercept of the two slopes */
    double domain;      /* The smoothing domain */
    double lower_slope; /* The lower slope */
    double upper_slope; /* The upper slope */
    double *y_output;   /* The smoothed y output */
    double *dy_dx;      /* The partial of y wrt x */

void
cm_smooth_discontinuity(x_input, x_lower, y_lower, x_upper, y_upper
                        y_output, dy_dx)

    double x_input;   /* The x value at which to compute y */
    double x_lower;   /* The x value of the lower corner */
    double y_lower;   /* The y value of the lower corner */
    double x_upper;   /* The x value of the upper corner */
    double y_upper;   /* The y value of the upper corner */
    double *y_output; /* The computed smoothed y value */
    double *dy_dx;    /* The partial of y wrt x */

double
cm_smooth_pwl(x_input, x, y, size, input_domain, dout_din)

    double x_input;      /* The x input value */
    double *x;           /* The vector of x values */
    double *y;           /* The vector of y values */
    int size;            /* The size of the xy vectors */
    double input_domain; /* The smoothing domain */
    double *dout_din;    /* The partial of the output wrt the input */
```

cm_smooth_corner() automates smoothing between two arbitrarily-sloped lines that meet at a single center point. You specify the center point (x_center, y_center), plus a domain (x-valued delta) above and below x_center. This defines a smoothing region about the center point. Then, the slopes of the meeting lines outside of this smoothing region are specified (lower_slope, upper_slope). The function then interpolates a smoothly-varying output (*y_output) and its derivative (*dy_dx) for the x_input value. This function helps to automate the smoothing of piecewise-linear functions, for example. Such smoothing aids the simulator in achieving convergence.

cm_smooth_discontinuity() allows you to obtain a smoothly-transitioning output (*y_output) that varies between two static values (y_lower, y_upper) as an independent variable (x_input) transitions between two values (x_lower, x_upper). This function is useful in interpolating between resistances or voltage levels that change abruptly between two values.

cm_smooth_pwl() duplicates much of the functionality of the predefined pwl code model. The cm smooth pwl() takes an input value plus x-coordinate and y-coordinate vector values along with the total number of coordinate points used to describe the piecewise linear transfer function and returns the interpolated or extrapolated value of the output based on that transfer function. More detail is available by looking at the description of the pwl code model. Note that the output value is the function's returned value.

27.7.2.3 Model State Storage Functions

```
void cm_analog_alloc(tag, size)

    int tag;  /* The user-specified tag for this block of memory */
    int size; /* The number of bytes to allocate */

void cm_event_alloc(tag, size)

    int tag; /* The user-specified tag for the memory block */
    int size; /* The number of bytes to be allocated */

void *cm_analog_get_ptr(tag, timepoint)

    int tag; /* The user-specified tag for this block of memory */
    int timepoint; /* The timepoint of interest - 0=current 1=previous */

void *cm_event_get_ptr(tag, timepoint)

    int tag; /* The user-specified tag for the memory block */
    int timepoint; /* The timepoint - 0=current, 1=previous */
```

cm_analog_alloc() and **cm_event_alloc()** allow you to allocate storage space for analog and event-driven model state information. The storage space is not static, but rather represents a storage vector of two values which rotate with each accepted simulator time-point evaluation. This is explained more fully below. The "tag" parameter allows you to specify an integer tag when allocating space. This allows more than one rotational storage location per model to be allocated. The "size" parameter specifies the size in bytes of the storage (computed by the C language "sizeof()" operator). Both cm_analog_alloc() and cm_event_alloc() will **not** return pointers to the allocated space, as has been available (and buggy) from the original XSPICE code. cm_analog_alloc() should be used by an analog model; cm_event_alloc() should be used by an event-driven model.

***cm_analog_get_ptr()** and ***cm_event_get_ptr()** retrieve the pointer location of the rotational storage space previously allocated by cm_analog_alloc() or cm_event_alloc(). **Important notice:** These functions must be called only after **all** memory allocation (all calls to cm_analog_alloc() or cm_event_alloc()) have been done. All pointers returned between calls to memory allocation will become obsolete (point to freed memory because of an internal realloc). The functions take the integer "tag" used to allocate the space, and an integer from 0 to 1 which specifies the time-point with which the desired state variable is associated (e.g. timepoint = 0 will retrieve the address of storage for the current time-point; timepoint = 1 will retrieve the address of storage for the last accepted time-point). **Note that once a model is exited, storage to the current time-point state storage location (i.e., timepoint = 0) will, upon the next time-point iteration, be rotated to the previous location (i.e., timepoint = 1).** When rotation is done, a copy of the old "timepoint = 0" storage value is placed in the new "timepoint = 0" storage location. Thus, if a value does not change for a particular iteration, specific writing to "timepoint = 0" storage is not required. These features allow a model coder to constantly know which piece of state information is being dealt with within the model function at each time-point.

27.7.2.4 Integration and Convergence Functions

```
int cm_analog_integrate(integrand, integral, partial)

    double integrand; /* The integrand */
    double *integral; /* The current and returned value of integral */
    double *partial;  /* The partial derivative of integral wrt integrand */

int cm_analog_converge(state)

    double *state; /* The state to be converged */

void cm_analog_not_converged()
void cm_analog_auto_partial()

double cm_ramp_factor()
```

cm_analog_integrate() takes as input the integrand (the input to the integrator) and produces as output the integral value and the partial of the integral with respect to the integrand. The integration itself is with respect to time, and the pointer to the integral value must have been previously allocated using cm_analog_alloc() and *cm_analog_get_ptr(). This is required because of the need for the integrate routine itself to have access to previously-computed values of the integral.

cm_analog_converge() takes as an input the address of a state variable that was previously allocated using cm_analog_alloc() and *cm_analog_get_ptr(). The function itself serves to notify the simulator that for each time-step taken, that variable must be iterated upon until it converges.

cm_analog_not_converged() is a function that can and should be called by an analog model whenever it performs internal limiting of one or more of its inputs to aid in reaching convergence. This causes the simulator to call the model again at the current time-point and continue solving the circuit matrix. A new time-point will not be attempted until the code model returns without calling the cm_analog_not_converged() function. For circuits which have trouble reaching a converged state (often due to multiple inputs changing too quickly for the model to react in a reasonable fashion), the use of this function is virtually mandatory.

cm_analog_auto_partial() may be called at the end of a code model function in lieu of calculating the values of partial derivatives explicitly in the function. When this function is called, no values should be assigned to the PARTIAL macro since these values will be computed automatically by the simulator. The automatic calculation of partial derivatives can save considerable time in designing and coding a model, since manual computation of partial derivatives can become very complex and error-prone for some models. However, the automatic evaluation may also increase simulation run time significantly. Function cm_analog_auto_partial() causes the model to be called N additional times (for a model with N inputs) with each input varied by a small amount (1e-6 for voltage inputs and 1e-12 for current inputs). The values of the partial derivatives of the outputs with respect to the inputs are then approximated by the simulator through divided difference calculations.

cm_analog_ramp_factor() will then return a value from 0.0 to 1.0, which indicates whether or not a ramp time value requested in the SPICE analysis deck (with the use of .option ramptime=<duration>) has elapsed. If the RAMPTIME option is used, then cm_analog_ramp_factor

returns a 0.0 value during the DC operating point solution and a value which is between 0.0 and 1.0 during the ramp. A 1.0 value is returned after the ramp is over or if the RAMPTIME option is not used. This value is intended as a multiplication factor to be used with all model outputs which would ordinarily experience a “power-up” transition. Currently, all sources within the simulator are automatically ramped to the "final" time-zero value if a RAMPTIME option is specified.

27.7.2.5 Message Handling Functions

```
char *cm_message_get_errmsg()
int cm_message_send(char *msg)
char *msg; /* The message to output. */
```

***cm_message_get_errmsg()** is a function designed to be used with other library functions to provide a way for models to handle error situations. More specifically, whenever a library function which returns type “int” is executed from a model, it will return an integer value, n. If this value is not equal to zero (0), then an error condition has occurred (likewise, functions which return pointers will return a NULL value if an error has occurred). At that point, the model can invoke *cm_message_get_errmsg to obtain a pointer to an error message. This can then in turn be displayed to the user or passed to the simulator interface through the cm_message_send() function. The C code required for this is as follows:

```
err = cm_analog_integrate(in, &out, &dout_din);
if (err) {
     cm_message_send(cm_message_get_errmsg());
}
else { ...
```

cm_message_send() sends messages to either the standard output screen or to the simulator interface, depending on which is in use.

27.7.2.6 Breakpoint Handling Functions

```
int cm_analog_set_perm_bkpt(time)

    double time; /* The time of the breakpoint to be set */

int cm_analog_set_temp_bkpt(time)

    double time; /* The time of the breakpoint to be set */

int cm_event_queue(time)

    double time; /* The time of the event to be queued */
```

cm_analog_set_perm_bkpt() takes as input a time value. This value is posted to the analog simulator algorithm and is used to force the simulator to choose that value as a breakpoint at

some time in the future. The simulator may choose as the next time-point a value less than the input, but not greater. Also, regardless of how many time-points pass before the breakpoint is reached, it will not be removed from posting. Thus, a breakpoint is guaranteed at the passed time value. Note that a breakpoint may also be set for a time prior to the current time, but this will result in an error if the posted breakpoint is prior to the last accepted time (i.e., T(1)).

cm_analog_set_temp_bkpt() takes as input a time value. This value is posted to the simulator and is used to force the simulator, for the next time-step only, to not exceed the passed time value. The simulator may choose as the next time-point a value less than the input, but not greater. In addition, once the next time-step is chosen, the posted value is removed regardless of whether it caused the break at the given time-point. This function is useful in the event that a time-point needs to be retracted after its first posting in order to recalculate a new breakpoint based on new input data (for controlled oscillators, controlled one-shots, etc), since temporary breakpoints automatically "go away" if not reposted each time-step. Note that a breakpoint may also be set for a time prior to the current time, but this will result in an error if the posted breakpoint is prior to the last accepted time (i.e., T(1)).

cm_event_queue() is similar to cm_analog_set_perm_bkpt(), but functions with event-driven models. When invoked, this function causes the model to be queued for calling at the specified time. All other details applicable to cm_analog_set_perm_bkpt() apply to this function as well.

27.7.2.7 Special Purpose Functions

```
void
cm_climit_fcn(in, in_offset, cntl_upper, cntl_lower, lower_delta, upper_delta,
              limit_range, gain, fraction, out_final, pout_pin_final,
              pout_pcntl_lower_final, pout_pcntl_upper_final)

    double in;          /* The input value */
    double in-offset;   /* The input offset */
    double cntl_upper;  /* The upper control input value */
    double cntl_lower;  /* The lower control input value */
    double lower_delta; /* The delta from control to limit value */
    double upper_delta; /* The delta from control to limit value */
    double limit_range; /* The limiting range */
    double gain;        /* The gain from input to output */
    int percent;        /* The fraction vs. absolute range flag */
    double *out_final;  /* The output value */
    double *pout_pin_final; /* The partial of output wrt input */
    double *pout_pcntl_lower_final; /* The partial of output wrt lower
                                       control input */
    double *pout_pcntl_upper:final; /* The partial of output wrt upper
                                       control input */

double cm_netlist_get_c()

double cm_netlist_get_l()
```

cm_climit_fcn() is a very specific function that mimics the behavior of the climit code model (see the Predefined Models section). In brief, the cm_climit_fcn() takes as input an "in" value,

an offset, and controlling upper and lower values. Parameter values include delta values for the controlling inputs, a smoothing range, gain, and fraction switch values. Outputs include the final value, plus the partial derivatives of the output with respect to signal input, and both control inputs. These all operate identically to the similarly-named inputs and parameters of the climit model.

The function performs a limit on the "in" value, holding it to within some delta of the controlling inputs, and handling smoothing, etc. The cm_climit_fcn() was originally used in the ilimit code model to handle much of the primary limiting in that model, and can be used by a code model developer to take care of limiting in larger models that require it. See the detailed description of the climit model for more in-depth description.

cm_netlist_get_c() and **cm_netlist_get_l()** functions search the analog circuitry to which their input is connected, and total the capacitance or inductance, respectively, found at that node. The functions, as they are currently written, assume they are called by a model which has only one single-ended analog input port.

27.7.2.8 Complex Math Functions

```
Complex_t cm_complex_set (real_part, imag_part)

    double real_part; /* The real part of the complex number */
    double imag_part; /* The imaginary part of the complex number */

Complex_t cm_complex_add (x, y)

    Complex_t x; /* The first operand of x + y */
    Complex_t y; /* The second operand of x + y */

Complex_t cm_complex_sub (x, y)

    Complex_t x; /* The first operand of x - y */
    Complex_t y; /* The second operand of x - y */

Complex_t cm_complex_mult (x, y)

    Complex_t x; /* The first operand of x * y */
    Complex_t y; /* The second operand of x * y */

Complex_t cm_complex_div (x, y)

    Complex_t x; /* The first operand of x / y */
    Complex_t y; /* The second operand of x / y */
```

cm_complex_set() takes as input two doubles, and converts these to a Complex_t. The first double is taken as the real part, and the second is taken as the imaginary part of the resulting complex value.

cm_complex_add(), **cm_complex_sub()**, **cm_complex_mult()**, and **cm_complex_div()** each take two complex values as inputs and return the result of a complex addition, subtraction, multiplication, or division, respectively.

27.8 User-Defined Node Definition File

The User-Defined Node Definition File (udnfunc.c) defines the C functions which implement basic operations on user-defined nodes such as data structure creation, initialization, copying, and comparison. Unlike the Model Definition File which uses the Code Model Preprocessor to translate Accessor Macros, the User-Defined Node Definition file is a pure C language file. This file uses macros to isolate you from data structure definitions, but the macros are defined in a standard header file (EVTudn.h), and translations are performed by the standard C Preprocessor.

When a directory is created for a new User-Defined Node with 'mkudndir', a structure of type 'Evt_Udn_Info_t' is placed at the bottom of the User-Defined Node Definition File.

This structure contains the type name for the node, a description string, and pointers to each of the functions that define the node. This structure is complete except for a text string that describes the node type. This string is stubbed out and may be edited by you if desired.

27.8.1 Macros

You must code the functions described in the following section using the macros appropriate for the particular function. You may elect whether not to provide the optional functions.

It is an error to use a macro not defined for a function. Note that a review of the sample directories for the "real" and "int" UDN types will make the function usage clearer.

The macros used in the User-Defined Node Definition File to access and assign data values are defined in Table 27.4. The translations of the macros and of macros used in the function argument lists are defined in the document Interface Design Document for the XSPICE Simulator of the
Automatic Test Equipment Software Support Environment (ATESSE).

27.8.2 Function Library

The functions (required and optional) that define a User-Defined Node are listed below. For optional functions, the function "stub" can be deleted from the udnfunc.c file template created by "mkudndir", and the pointer in the Evt_Udn_Info_t structure can be changed to NULL.

Required functions:

```
create      Allocate data structure used as inputs and outputs to
            code models.

initialize  Set structure to appropriate initial value for first use as
            model input.

copy        Make a copy of the contents into created but possibly
            uninitialized structure.

compare     Determine if two structures are equal in value.
```

Name	Type	Description
MALLOCED_PTR	void *	Assign pointer to allocated structure to this macro
STRUCT_PTR	void *	A pointer to a structure of the defined type
STRUCT_PTR_1	void *	A pointer to a structure of the defined type
STRUCT_PTR_2	void *	A pointer to a structure of the defined type
EQUAL	Mif_Boolean_t	Assign TRUE or FALSE to this macro according to the results of structure comparison
INPUT_STRUCT_PTR	void *	A pointer to a structure of the defined type
OUTPUT_STRUCT_PTR	void *	A pointer to a structure of the defined type
INPUT_STRUCT_PTR_ARRAY	void **	An array of pointers to structures of the defined type
INPUT_STRUCT_PTR_ARRAY_SIZE	int	The size of the array
STRUCT_MEMBER_ID	char *	A string naming some part of the structure
PLOT_VAL	double	The value of the specified structure member for plotting purposes
PRINT_VAL	char *	The value of the specified structure member for printing purposes

Table 27.4: User-Defined Node Macros

Optional functions:

dismantle	Free allocations inside structure (but not structure itself).
invert	Invert logical value of structure.
resolve	Determine the resultant when multiple outputs are connected to a node.
plot_val	Output a real value for specified structure component for plotting purposes.
print_val	Output a string value for specified structure component for printing.
ipc_val	Output a binary representation of the structure suitable for sending over the IPC channel.

The required actions for each of these functions are described in the following subsections. In each function, "mkudndir" replaces the XXX with the node type name specified by you when mkudndir is invoked. The macros used in implementing the functions are described in a later section.

27.8.2.1 Function udn_XXX_create

Allocate space for the data structure defined for the User-Defined Node to pass data between models. Then assign pointer created by the storage allocator (e.g. malloc) to MALLOCED_PTR.

27.8.2.2 Function udn_XXX_initialize

Assign STRUCT_PTR to a pointer variable of defined type and then initialize the value of the structure.

27.8.2.3 Function udn_XXX_compare

Assign STRUCT_PTR_1 and STRUCT_PTR_2 to pointer variables of the defined type. Compare the two structures and assign either TRUE or FALSE to EQUAL.

27.8.2.4 Function udn_XXX_copy

Assign INPUT_STRUCT_PTR and OUTPUT_STRUCT_PTR to pointer variables of the defined type and then copy the elements of the input structure to the output structure.

27.8.2.5 Function udn_XXX_dismantle

Assign STRUCT_PTR to a pointer variable of defined type and then free any allocated substructures (but not the structure itself!). If there are no substructures, the body of this function may be left null.

27.8.2.6 Function udn_XXX_invert

Assign STRUCT_PTR to a pointer variable of the defined type, and then invert the logical value of the structure.

27.8.2.7 Function udn XXX resolve

Assign INPUT_STRUCT_PTR_ARRAY to a variable declared as an array of pointers of the defined type - e.g.:

```
<type> **struct_array;
struct_array = INPUT_STRUCT_PTR_ARRAY;
```

Then, the number of elements in the array may be determined from the integer valued INPUT_STRUCT_PTR_ARRAY_SIZE macro.

Assign OUTPUT_STRUCT_PTR to a pointer variable of the defined type. Scan through the array of structures, compute the resolved value, and assign it into the output structure.

27.8.2.8 Function udn_XXX_plot_val

Assign STRUCT_PTR to a pointer variable of the defined type. Then, access the member of the structure specified by the string in STRUCT_MEMBER_ID and assign some real valued quantity for this member to PLOT_VALUE.

27.8.2.9 Function udn_XXX_print_val

Assign STRUCT_PTR to a pointer variable of the defined type. Then, access the member of the structure specified by the string in STRUCT_MEMBER_ID and assign some string valued quantity for this member to PRINT_VALUE.

If the string is not static, a new string should be allocated on each call. Do not free the allocated strings.

27.8.2.10 Function udn XXX ipc val

Use STRUCT_PTR to access the value of the node data. Assign to IPC_VAL a binary representation of the data. Typically this can be accomplished by simply assigning STRUCT_PTR to IPC_VAL.

Assign to IPC_VAL_SIZE an integer representing the size of the binary data in bytes.

27.8.3 Example UDN Definition File

The following is an example UDN Definition File which is included with the XSPICE system. It illustrates the definition of the functions described above for a User-Defined Node type which is included with the XSPICE system: in this case, the “int” (for “integer”) node type.

```
#include "EVTudn.h"

void *malloc(unsigned);

/* ------------------------------------------------------------ */

void udn_int_create(CREATE_ARGS)
{
    /* Malloc space for an int */
    MALLOCED_PTR = malloc(sizeof(int));
}

/* ------------------------------------------------------------ */

void udn_int_dismantle(DISMANTLE_ARGS)
{
    /* Do nothing. There are no internally
       malloc'ed things to dismantle */
}

/* ------------------------------------------------------------ */

void udn_int_initialize(INITIALIZE_ARGS)
{
    int *int_struct = STRUCT_PTR;

    /* Initialize to zero */
    *int.struct = 0;
}

/* ------------------------------------------------------------ */

void udn_int_invert(INVERT_ARGS)
{
    int *int_struct = STRUCT_PTR;

    /* Invert the state */
    *int_struct = -(*int.struct);
}

/* ------------------------------------------------------------ */
```

```
void udn_int_copy(COPY_ARGS)
{
    int *int_from_struct = INPUT_STRUCT_PTR;
    int *int_to_struct   = OUTPUT_STRUCT_PTR;

    /* Copy the structure */
    *int_to_struct = *int_from_struct;
}

/* ------------------------------------------------------------ */

void udn_int_resolve(RESOLVE_ARGS)
{
    int **array    = INPUT_STRUCT_PTR_ARRAY;
    int *out       = OUTPUT_STRUCT_PTR;
    int num.struct = INPUT_STRUCT_PTR_ARRAY_SIZE;
    int sum;
    int i;

    /* Sum the values */
    for(i = 0, sum = 0; i ! num_struct; i++)
        sum += *(array[i]);

    /* Assign the result */
    *out = sum;
}

/* ------------------------------------------------------------ */

void udn_int_compare(COMPARE_ARGS)
{
    int *int_struct1 = STRUCT_PTR_1;
    int *int_struct2 = STRUCT_PTR_2;

    /* Compare the structures */
    if((*int_struct1) == (*int_struct2))
        EQUAL = TRUE;
    else
        EQUAL = FALSE;
}

/* ------------------------------------------------------------ */

void udn_int_plot_val(PLOT_VAL_ARGS)
{
    int *int_struct = STRUCT_PTR;

    /* Output a value for the int struct */
```

```
    PLOT_VAL = *int_struct;
}

/* ------------------------------------------------------------ */

void udn_int_print_val(PRINT_VAL_ARGS)
{
    int *int_struct = STRUCT_PTR;

    /* Allocate space for the printed value */
    PRINT_VAL = malloc(30);

    /* Print the value into the string */
    sprintf(PRINT_VAL, "%8d", *int_struct);
}

/* ------------------------------------------------------------ */

void udn_int_ipc_val(IPC_VAL_ARGS)
{
    /* Simply return the structure and its size */
    IPC_VAL = STRUCT_PTR;
    IPC_VAL_SIZE = sizeof(int);
}

/* ------------------------------------------------------------ */

Evt_Udn_Info_t udn_int_info = {

    "int",
    "integer valued data",

    udn_int_create,
    udn_int_dismantle,
    udn_int_initialize,
    udn_int_invert,
    udn_int_copy,
    udn_int_resolve,
    udn_int_compare,
    udn_int_plot_val,
    udn_int_print_val,
    udn_int_ipc_val

};
```

Chapter 28

Error Messages

Error messages may be subdivided into three categories. These are:

1. Error messages generated during the development of a code model (Preprocessor Error Messages).
2. Error messages generated by the simulator during a simulation run (Simulator Error Messages).
3. Error messages generated by individual code models (Code Model Error Messages).

These messages will be explained in detail in the following subsections.

28.1 Preprocessor Error Messages

The following is a list of error messages that may be encountered when invoking the directory-creation and code modeling preprocessor tools. These are listed individually, and explanations follow the name/listing.

```
Usage: cmpp [-ifs] [-mod [<filename>]] [-lst]
```

The Code Model Preprocessor (cmpp) command was invoked incorrectly.

```
ERROR - Too few arguments
```

The Code Model Preprocessor (cmpp) command was invoked with too few arguments.

```
ERROR - Too many arguments
```

The Code Model Preprocessor (cmpp) command was invoked with too many arguments.

```
ERROR - Unrecognized argument
```

The Code Model Preprocessor (cmpp) command was invoked with an invalid argument.

```
ERROR - File not found: s<filename>
```

The specified file was not found, or could not be opened for read access.

```
ERROR - Line <line number> of <filename> exceeds XX characters
```

The specified line was too long.

```
ERROR - Pathname on line <line number> of <filename>
        exceeds XX characters.
```

The specified line was too long.

```
ERROR - No pathnames found in file: <filename>
```

The indicated modpath.lst file does not have pathnames properly listed.

```
ERROR - Problems reading ifspec.ifs in directory <pathname>
```

The Interface Specification File (ifspec.ifs) for the code model could not be read.

```
ERROR - Model name <model name> is same as internal SPICE model name
```

A model has been given the same name as an intrinsic SPICE device.

```
ERROR - Model name '<model name>' in directory: <pathname>
        is same as
        model name '<model name>' in directory: <pathname>
```

Two models in different directories have the same name.

```
ERROR - C function name '<function name>' in directory: <pathname>,
        is same as
        C function name '<function name>' in directory: <pathname>
```

Two C language functions in separate model directories have the same names; these would cause a collision when linking the final executable.

```
ERROR - Problems opening CMextrn.h for write
```

The temporary file CMextern.h used in building the XSPICE simulator executable could not be created or opened. Check permissions on directory.

```
ERROR - Problems opening CMinfo.h for write
```

The temporary file CMinfo.h used in building the XSPICE simulator executable could not be created or opened. Check permissions on directory.

```
ERROR - Problems opening objects.inc file for write
```

The temporary file objects.inc used in building the XSPICE simulator executable could not be created or opened. Check permissions on directory.

```
ERROR - Could not open input .mod file: <filename>
```

The Model Definition File that contains the definition of the Code Model's behavior (usually cfunc.mod) was not found or could not be read.

```
ERROR - Could not open output .c: <filename>
```

The indicated C language file that the preprocessor creates could not be created or opened. Check permissions on directory.

```
Error parsing .mod file: <filename>
```

Problems were encountered by the preprocessor in interpreting the indicated Model Definition File.

```
ERROR - File not found: <filename>
```

The indicated file was not found or could not be opened.

```
Error parsing interface specification file
```

Problems were encountered by the preprocessor in interpreting the indicated Interface Specification File.

```
ERROR - Can't create file: <filename>
```

The indicated file could not be created or opened. Check permissions on directory.

```
ERROR - write.port.info() - Number of allowed types cannot be zero
```

There must be at least one port type specified in the list of allowed types.

```
illegal quoted character in string (expected "\" or "\\")
```

A string was found with an illegal quoted character in it.

```
unterminated string literal
```

A string was found that was not terminated.

```
Unterminated comment
```

A comment was found that was not terminated.

```
Port '<port name>' not found
```

The indicated port name was not found in the Interface Specification File.

```
Port type 'vnam' is only valid for 'in' ports
```

The port type 'vnam' was used for a port with direction 'out' or 'inout'. This type is only allowed on 'in' ports.

```
Port types 'g', 'gd', 'h', 'hd' are only valid for 'inout' ports
```

Port type 'g', 'gd', 'h', or 'hd' was used for a port with direction 'out' or 'in'. These types are only allowed on 'inout' ports.

```
Invalid parameter type - POINTER type valid only for STATIC_VARs
```

The type POINTER was used in a section of the Interface Specification file other than the STATIC_VAR section.

```
Port default type is not an allowed type
```

A default type was specified that is not one of the allowed types for the port.

```
Incompatible port types in 'allowed_types' clause
```

Port types listed under 'Allowed_Types' in the Interface Specification File must all have the same underlying data type. It is illegal to mix analog and eventdriven types in a list of allowed types.

```
Invalid parameter type (saw <parameter type 1> - expected <parameter type 2>)
```

A parameter value was not compatible with the specified type for the parameter.

```
Named range not allowed for limits
```

A name was found where numeric limits were expected.

```
Direction of port '<port number>' in <port name>()
 is not <IN or OUT> or INOUT
```

A problem exists with the direction of one of the elements of a port vector.

```
Port '<port name>' is an array - subscript required
```

A port was referenced that is specified as an array (vector) in the Interface Specification File. A subscript is required (e.g. myport[i])

```
Parameter '<parameter name>' is an array - subscript required
```

A parameter was referenced that is specified as an array (vector) in the Interface Specification File. A subscript is required (e.g. myparam[i])

```
Port '<port name>' is not an array - subscript prohibited
```

A port was referenced that is not specified as an array (vector) in the Interface Specification File. A subscript is not allowed.

```
Parameter '<parameter name>' is not an array - subscript prohibited
```

A parameter was referenced that is not specified as an array (vector) in the Interface Specification File. A subscript is not allowed.

```
Static variable '<static variable name>' is not an array - subscript prohibited
```

Array static variables are not supported. Use a POINTER type for the static variable.

```
Buffer overflow - try reducing the complexity of CM-macro array subscripts
```

The argument to a code model accessor macro was too long.

```
Unmatched )
```

An open (was found with no corresponding closing).

```
Unmatched ]
```

An open [was found with no corresponding closing].

28.2 Simulator Error Messages

The following is a list of error messages that may be encountered while attempting to run a simulation (with the exception of those error messages generated by individual code models). Most of these errors are generated by the simulator while attempting to parse a SPICE deck. These are listed individually, and explanations follow the name/listing.

```
ERROR - Scalar port expected, [ found
```

A scalar connection was expected for a particular port on the code model, but the symbol [which is used to begin a vector connection list was found.

```
ERROR - Unexpected ]
```

A] was found where not expected. Most likely caused by a missing [.

```
ERROR - Unexpected [ - Arrays of arrays not allowed
```

A [character was found within an array list already begun with another [character.

```
ERROR - Tilde not allowed on analog nodes
```

The tilde character ~was found on an analog connection. This symbol, which performs state inversion, is only allowed on digital nodes and on User-Defined Nodes only if the node type definition allows it.

```
ERROR - Not enough ports
```

An insufficient number of node connections was supplied on the instance line. Check the Interface Specification File for the model to determine the required connections and their types.

```
ERROR - Expected node/instance identifier
```

A special token (e.g. [ ] < > ...) was found when not expected.

```
ERROR - Expected node identifier
```

A special token (e.g. [ ] < > ...) was found when not expected.

```
ERROR - unable to find definition of model <name>
```

A .model line for the referenced model was not found.

```
ERROR - model: %s - Array parameter expected - No array delimiter found
```

An array (vector) parameter was expected on the .model card, but enclosing [ ] characters were not found to delimit its values.

```
ERROR - model: %s - Unexpected end of model card
```

The end of the indicated .model line was reached before all required information was supplied.

```
ERROR - model: %s - Array parameter must have at least one value
```

An array parameter was encountered that had no values.

```
ERROR - model: %s - Bad boolean value
```

A bad values was supplied for a Boolean. Value used must be TRUE, FALSE, T, or F.

```
ERROR - model: %s - Bad integer, octal, or hex value
```

A badly formed integer value was found.

```
ERROR - model: %s - Bad real value
```

A badly formed real value was found.

```
ERROR - model: %s - Bad complex value
```

A badly formed complex number was found. Complex numbers must be enclosed in < > delimiters.

28.3 Code Model Error Messages

The following is a list of error messages that may be encountered while attempting to run a simulation with certain code models. These are listed alphabetically based on the name of the code model, and explanations follow the name and listing.

28.3.1 Code Model aswitch

```
cntl_error:
    *****ERROR*****
    ASWITCH: CONTROL voltage delta less than 1.0e-12
```

This message occurs as a result of the cntl_off and cntl_on values**--with-editline=yes** being less than 1.0e-12 volts/amperes apart.

28.3.2 Code Model climit

```
climit_range_error:
    **** ERROR ****
    * CLIMIT function linear range less than zero. *
```

This message occurs whenever the difference between the upper and lower control input values are close enough that there is no effective room for proper limiting to occur; this indicates an error in the control input values.

28.3.3 Code Model core

```
allocation_error:
    ***ERROR***
    CORE: Allocation calloc failed!
```

This message is a generic message related to allocating sufficient storage for the H and B array values.

```
limit_error:
   ***ERROR***
   CORE: Violation of 50% rule in breakpoints!
```

This message occurs whenever the input domain value is an absolute value and the H coordinate points are spaced too closely together (overlap of the smoothing regions will occur unless the H values are redefined).

28.3.4 Code Model d_osc

```
d_osc_allocation_error:
    **** Error ****
    D_OSC: Error allocating VCO block storage
```

Generic block storage allocation error.

```
d_osc_array_error:
    **** Error ****
    D_OSC: Size of control array different than frequency array
```

Error occurs when there is a different number of control array members than frequency array members.

```
d_osc_negative_freq_error:
    **** Error ****
    D_OSC: The extrapolated value for frequency
    has been found to be negative...
     Lower frequency level has been clamped to 0.0 Hz.
```

Occurs whenever a control voltage is input to a model which would ordinarily (given the specified control/freq coordinate points) cause that model to attempt to generate an output oscillating at zero frequency. In this case, the output will be clamped to some DC value until the control voltage returns to a more reasonable value.

28.3.5 Code Model d_source

```
loading_error:
    ***ERROR***
    D_SOURCE: source.txt file was not read successfully.
```

This message occurs whenever the d source model has experienced any difficulty in loading the source.txt (or user-specified) file. This will occur with any of the following problems:

- Width of a vector line of the source file is incorrect.
- A time-point value is duplicated or is otherwise not monotonically increasing.
- One of the output values was not a valid 12-State value (0s, 1s, Us, 0r, 1r, Ur, 0z, 1z, Uz, 0u, 1u, Uu).

28.3.6 Code Model d_state

```
loading_error:
    ***ERROR***
    D_STATE: state.in file was not read successfully.
    The most common cause of this problem is a trailing
    blank line in the state.in file
```

This error occurs when the state.in file (or user-named state machine input file) has not been read successfully. This is due to one of the following:

- The counted number of tokens in one of the file's input lines does not equal that required to define either a state header or a continuation line (Note that all comment lines are ignored, so these will never cause the error to occur).
- An output state value was defined using a symbol which was invalid (i.e., it was not one of the following: 0s, 1s, Us, 0r, 1r, Ur, 0z, 1z, Uz, 0u, 1u, Uu).
- An input value was defined using a symbol which was invalid (i.e., it was not one of the following: 0, 1, X, or x).

```
index_error:
   ***ERROR***
   D_STATE: An error exists in the ordering of states values
   in the states->state[] array. This is usually caused
   by non-contiguous state definitions in the state.in file
```

This error is caused by the different state definitions in the input file being non-contiguous. In general, it will refer to the different states not being defined uniquely, or being "broken up" in some fashion within the state.in file.

28.3.7 Code Model oneshot

```
oneshot_allocation_error:
    **** Error ****
    ONESHOT: Error allocating oneshot block storage
```

Generic storage allocation error.

```
oneshot_array_error:
    **** Error ****
    ONESHOT: Size of control array different than pulse-width array
```

This error indicates that the control array and pulse-width arrays are of different sizes.

```
oneshot_pw_clamp:
    **** Warning ****
    ONESHOT: Extrapolated Pulse-Width Limited to zero
```

This error indicates that for the current control input, a pulse-width of less than zero is indicated. The model will consequently limit the pulse width to zero until the control input returns to a more reasonable value.

28.3.8 Code Model pwl

```
allocation_error:
    ***ERROR***
    PWL: Allocation calloc failed!
```

Generic storage allocation error.

```
limit_error:
    ***ERROR***
    PWL: Violation of 50% rule in breakpoints!
```

This error message indicates that the pwl model has an absolute value for its input domain, and that the x_array coordinates are so close together that the required smoothing regions would overlap. To fix the problem, you can either spread the x_array coordinates out or make the input domain value smaller.

28.3.9 Code Model s_xfer

```
num_size_error:
    ***ERROR***
    S_XFER: Numerator coefficient array size greater than
    denominator coefficient array size.
```

This error message indicates that the order of the numerator polynomial specified is greater than that of the denominator. For the s_xfer model, the orders of numerator and denominator polynomials must be equal, or the order of the denominator polynomial must be greater than that or the numerator.

28.3.10 Code Model sine

```
allocation_error:
    **** Error ****
    SINE: Error allocating sine block storage
```

Generic storage allocation error.

```
sine_freq_clamp:
    **** Warning ****
    SINE: Extrapolated frequency limited to 1e-16 Hz
```

This error occurs whenever the controlling input value is such that the output frequency ordinarily would be set to a negative value. Consequently, the output frequency has been clamped to a near-zero value.

```
array_error:
    **** Error ****
    SINE: Size of control array different than frequency array
```

This error message normally occurs whenever the controlling input array and the frequency array are different sizes.

28.3.11 Code Model square

```
square_allocation_error:
    **** Error ****
    SQUARE: Error allocating square block storage
```

Generic storage allocation error.

```
square_freq_clamp:
    **** WARNING ****
    SQUARE: Frequency extrapolation limited to 1e-16
```

This error occurs whenever the controlling input value is such that the output frequency ordinarily would be set to a negative value. Consequently, the output frequency has been clamped to a near-zero value.

```
square_array_error:
    **** Error ****
    SQUARE: Size of control array different than frequency array
```

This error message normally occurs whenever the controlling input array and the frequency array are different sizes.

28.3.12 Code Model triangle

```
triangle_allocation_error:
    **** Error ****
    TRIANGLE: Error allocating triangle block storage
```

Generic storage allocation error.

```
triangle_freq_clamp:
    **** Warning ****
    TRIANGLE: Extrapolated Minimum Frequency Set to 1e-16 Hz
```

This error occurs whenever the controlling input value is such that the output frequency ordinarily would be set to a negative value. Consequently, the output frequency has been clamped to a near-zero value.

```
triangle_array_error:
    **** Error ****
    TRIANGLE: Size of control array different than frequency array
```

This error message normally occurs whenever the controlling input array and the frequency array are different sizes.

Part III

CIDER

Chapter 29

CIDER User's Manual

The CIDER User's Manual that follows is derived from the original manual being part of the PhD thesis from David A. Gates from UC Berkeley. Unfortunately the manual here is not yet complete, so please refer to the thesis for detailed information. Literatur on CODECS, the predecessor of CIDER, is available here from UCB: TechRpt ERL-90-96 and TechRpt ERL-88-71.

29.1 SPECIFICATION

Overview of numerical-device specification

The input to CIDER consists of a SPICE-like description of a circuit, its analyses and its compact device models, and PISCES-like descriptions of numerically analyzed device models. For a description of the SPICE input format, consult the SPICE3 Users Manual [JOHN92].

To simulate devices numerically, two types of input must be added to the input file. The first is a model description in which the common characteristics of a device class are collected. In the case of numerical models, this provides all the information needed to construct a device cross-section, such as, for example, the doping profile. The second type of input consists of one or more element lines that specify instances of a numerical model, describe their connection to the rest of the circuit, and provide additional element-specific information such as device layout dimensions ans initial bias information.

The format of a numerical device model description differs from the standard approach used for SPICE3 compact models. It begins the same way with one line containing the .MODEL keyword followed by the name of the model, device type and modeling level. However, instead of providing a single long list of parameters and their values, numerical model parameters are grouped onto **cards**. Each type of card has its own set of valid parameters. In all cases, the relative ordering of different types of cards is unimportant. However, for cards of the same type (such as mesh-specification cards), their order in the input file can be important in determining the device structure.

Each card begins on a separate line of the input file. In order to let CIDER know that card lines are continuations of a numerical model description, each must begin with the continuation character "+". If there are too many parameters on a given card to allow it fit on a single line, the card can be continued by adding a second "+" to the beginning of the next line. However, the name and value of a parameter should always appear on the same line.

Several features are provided to make the numerical model format more convenient.

Blank space can follow the initial "+" to separate it from the name of a card or the card continuation "+". Blank lines are also permitted, as long as they also begin with an initial "+". Parentheses and commas can be used to visually group or separate parameter definitions. In addition, while it is common to add an equal sign between a parameter and its value, this is not strictly necessary.

The name of any card can be abbreviated, provided that the abbreviation is unique. Parameter name abbreviations can also be used if they are unique in the list of a card's parameters. Numeric parameter values are treated identically as in SPICE3, so exponential notation, engineering scale factors and units can be attached to parameter values: `tau=10ns, nc=3.0e19cm^-3`. In SPICE3, the value of a FLAG model parameter is changed to TRUE simply by listing its name on the model line. In CIDER, the value of a numerical model FLAG parameter can be turned back to FALSE by preceding it by a caret "^". This minimizes the amount of input change needed when features such as debugging are turned on and off. In certain cases it is necessary to include file names in the input description and these names may contain capital letters. If the file name is part of an element line, the inout parser will convert these capitals to lowercase letters. To protect capitalization at any time, simply enclose the string in double quotes """".

The remainder of this manual describes how numerically analyzed elements and models can be used in CIDER simulations. The manual consists of three parts. First, all of the model cards and their parameters are described. This is followed by a section describing the three basic types of numerical models and their corresponding element lines. In the final section, several complete examples of CIDER simulations are presented.

Several conventions are used in the card descriptions. In the card synopses, the name of a card is followed by a list of parameter classes. Each class is represented by a section in the card parameter table, in the same order as it appears in the synopsis line. Classes which contain optional parameters are surrounded by brackets: [...]. Sometimes it only makes sense for a single parameter to take effect. (For example, a material can not simultaneously be both Si and SiO2.) In such cases, the various choices are listed sequentially, separated by colons. The same parameter often has a number of different acceptable names, some of which are listed in the parameter tables.[1] These aliases are separated by vertical bars: "|". Finally, in the card examples, the model continuation pluses have been removed from the card lines for clarity's sake.

29.1.1 Examples

The model description for a two-dimensional numerical diode might look something like what follows. This example demonstrates many of the features of the input format described above. Notice how the .MODEL line and the leading pluses form a border around the model description:

[1] Some of the possibilities are not listed in order to shorten the lengths of the parameter tables. This makes the use of parameter abbreviations somewhat troublesome since an unlisted parameter may abbreviate to the same name as one that is listed. CIDER will produce a warning when this occurs. Many of the undocumented parameter names are the PISCES names for the same parameters. The adventurous soul can discover these names by delving through the "cards" directory of the source code distribution looking for the C parameter tables.

Example: Numerical diode

```
.MODEL M_NUMERICAL NUPD LEVEL=2
+ cardname1 number1=val1 (number2 val2), (number3 = val3)
+ cardname2 number1=val1 string1 = name1
+
+ cardname3 number1=val1, flag1, ^flag2
+ + number2=val2, flag3
```

The element line for an instance of this model might look something like the following. Double quotes are used to protect the file name from decapitalization:

```
d1 1 2 M_NUMERICAL area=10Opm^2 ic.file = "diode.IC"
```

29.2 BOUNDARY, INTERFACE

Specify properties of a domain boundary or the interface between two boundaries

SYNOPSIS

```
boundary domain [bounding-box] [properties]
interface domain neighbor [bounding-box] [properties]
```

29.2.1 DESCRIPTION

The boundary and interface cards are used to set surface physics parameters along the boundary of a specified domain. Normally, the parameters apply to the entire boundary, but there are two ways to restrict the area of interest. If a neighboring domain is also specified, the parameters are only set on the interface between the two domains. In addition, if a bounding box is given, only that portion of the boundary or interface inside the bounding box will be set.

If a semiconductor-insulator interface is specified, then an estimate of the width of any inversion or accumulation layer that may form at the interface can be provided. If the surface mobility model (cf. **models** card) is enabled, then the model will apply to all semiconductor portions of the device within this estimated distance of the interface. If a point lies within the estimated layer width of more than one interface, it belong to the interface specified first in the input file. If the layer width given is less than or equal to zero, it is automatically replaced by an estimate calculated from the doping near the interface. As a consequence, if the doping varies so will the layer width estimate.

Each edge of the bounding box can be specified in terms of its location or its mesh-index in the relevant dimension, or defaulted to the respective boundary of the simulation mesh.

29.2.2 PARAMETERS

Name	Type	Description	Units
Domain	Integer	ID number of primary domain	
Neighbor	Integer	ID number of neighboring domain	
X.Low	Real	Lowest X location of bounding box	μm
: IX.Low	Integer	Lowest X mesh-index of bounding box	
X.High	Real	Highest X location of bounding box	μm
: IX.High	Integer	Highest X mesh-index of bounding box	
Y.Low	Real	Lowest Y location of bounding box	μm
: IY.Low	Integer	Lowest Y mesh-index of bounding box	
Y.High	Real	Highest Y location of bounding box	μm
:IY.High	Integer	Highest Y mesh-index of bounding box	
Qf	Real	Fixed interface charge	C/cm^2
SN	Real	Surface recombination velocity - electrons	cm/s
SP	Real	Surface recombination velocity - holes	cm/s
Layer.Width	Real	Width of surface layer	μm

29.2.3 EXAMPLES

The following shows how the surface recombination velocities at an Si-SiO2 interface might be set:

```
interface dom=1 neigh=2 sn=1.0e4 sp=1.0e4
```

In a MOSFET with a 2.0μm gate width and 0.1μm source and drain overlap, the surface channel can be restricted to the region between the metallurgical junctions and within 100 $\dot{A}$ (0.01 μm) of the interface:

```
interface dom=1 neigh=2 x.l=1.1 x.h=2.9 layer.w=0.01
```

The inversion layer width in the previous example can be automatically determined by setting the estimate to 0.0:

```
interface dom=1 neigh=% x.l=1.1 x.h=2.9 layer.w=0.0
```

29.3 COMMENT

Add explanatory comments to a device definition

SYNOPSIS

```
comment [text]
* [text]
$ [text]
# [text]
```

29.3.1 DESCRIPTION

Annotations can be added to a device definition using the comment card. All text on a comment card is ignored. Several popular commenting characters are also supported as aliases: '*' from SPICE, '$' from PISCES, and '#' from LINUX shell scripts.

29.3.2 EXAMPLES

A SPICE-like comment is followed by a PISCES-like comment and shell script comment:

```
* CIDER and SPICE would ignore this input line
$ CIDER and PISCES would ignore this , but SPICE wouldn't
# CIDER and LINUX Shell scripts would ignore this input line
```

29.4 CONTACT

Specify properties of an electrode

SYNOPSIS

```
contact number [workfunction]
```

29.4.1 DESCRIPTION

The properties of an electrode can be set using the contact card. The only changeable property is the work-function of the electrode material and this only affects contacts made to an insulating material. All contacts to semiconductor material are assumed to be ohmic in nature.

29.4.2 PARAMETERS

Name	Type	Description
Number	Integer	ID number of the electrode
Work-function	Real	Work-function of electrode material. (eV)

29.4.3 EXAMPLES

The following shows how the work-function of the gate contact of a MOSFET might be changed to a value appropriate for a P+ polysilicon gate:

```
contact num=2 workf=5.29
```

29.4.4 SEE ALSO

electrode, material

29.5 DOMAIN, REGION

Identify material-type for section of a device

SYNOPSIS

```
domain number material [position]
region number material [position]
```

29.5.1 DESCRIPTION

A device is divided into one or more rectilinear domains, each of which has a unique identification number and is composed of a particular material.

Domain (aka region) cards are used to build up domains by associating a material type with a box-shaped section of the device. A single domain may be the union 0f multiple boxes. When multiple domain cards overlap in space, the one occurring last in the input file will determine the ID number and material type of the overlapped region.

Each edge of a domain box can be specified in terms of its location or mesh-index in the relevant dimension, or defaulted to the respective boundary of the simulation mesh.

29.5.2 PARAMETERS

Name	Type	Description
Number	Integer	ID number of this domain
Material	Integer	ID number of material used by this domain
X.Low	Real	Lowest X location of domain box, (μm)
:IX.Low	Integer	Lowest X mesh-index of domain box
X.High	Real	Highest X location of domain box, (μm)
:IX-High	Integer	Highest X mesh-index of domain box
Y.Low	Real	Lowest Y location of domain box, (μm)
:IY.Low	Integer	Lowest Y mesh-index of domain box
Y.High	Real	Highest Y location of domain box, (μm)
:IY.High	Integer	Highest Y mesh-index of domain box

29.5.3 EXAMPLES

Create a 4.0 pm wide by 2.0 pm high domain out of material #1:

```
domain num=1 material=1 x.l=O.O x.h=4.0 y.l=O.O y.h=2.0
```

The next example defines the two domains that would be typical of a planar MOSFET simulation. One occupies all of the mesh below y = 0 and the other occupies the mesh above y = 0. Because the x values are left unspecified, the low and high x boundaries default to the edges of the mesh:

```
domain n=1 m=1 y.l=0.0
domain n=2 m=2 y.h=0.0
```

29.5.4 SEE ALSO

x.mesh, material

29.6 DOPING

Add dopant to regions of a device

SYNOPSIS

```
doping [domains] profile-type [lateral-profile-type] [axis]
    [impurity-type1 [constant-box] [profile-specifications]
```

29.6.1 DESCRIPTION

Doping cards are used to add impurities to the various domains of a device. Initially each domain is dopant-free. Each new doping card creates a new doping profile that defines the dopant concentration as a function of position. The doping at a particular location is then the sum over all profiles of the concentration values at that position. Each profile can be restricted to a subset of a device's domains by supplying a list of the desired domains.

Otherwise, all domains are doped by each profile.

A profile has uniform concentration inside the constant box. Outside this region, it varies according to the primary an lateral profile shapes. In 1D devices the lateral shape is unused and in 2D devices the y-axis is the default axis for the primary profile. Several analytic functions can be used to define the primary profile shape. Alternatively, empirical or simulated profile data can be extracted from a file. For the analytic profiles, the doping is the product of a profile function (e.g. Gaussian) and a reference concentration, which is either the constant concentration of a uniform profile, or the peak concentration for any of the other functions. If concentration data is used instead take from an ASCII file containing a list of location-concentration pairs or a SUPREM3 exported file, the name of the file must be provided. If necessary, the final concentration at a point is then found by multiplying the primary profile concentration by the value of the lateral profile function at that point. Empirical profiles must first be normalized by the value at 0.0 to provide a usable profile functions. Alternatively, the second dimension can be included by assigning the same concentration to all points equidistant from the edges of the constant box. The contours of the profile are the circular.

Unless otherwise specified, the added impurities are assumes to be N type. However, the name of a specific dopant species is needed when extracting concentration information for that impurity from a SUPREM3 exported file.

Several parameters are used to adjust the basic shape of a profile functions so that the final, constructed profile, matches the doping profile in the real device. The constant box region

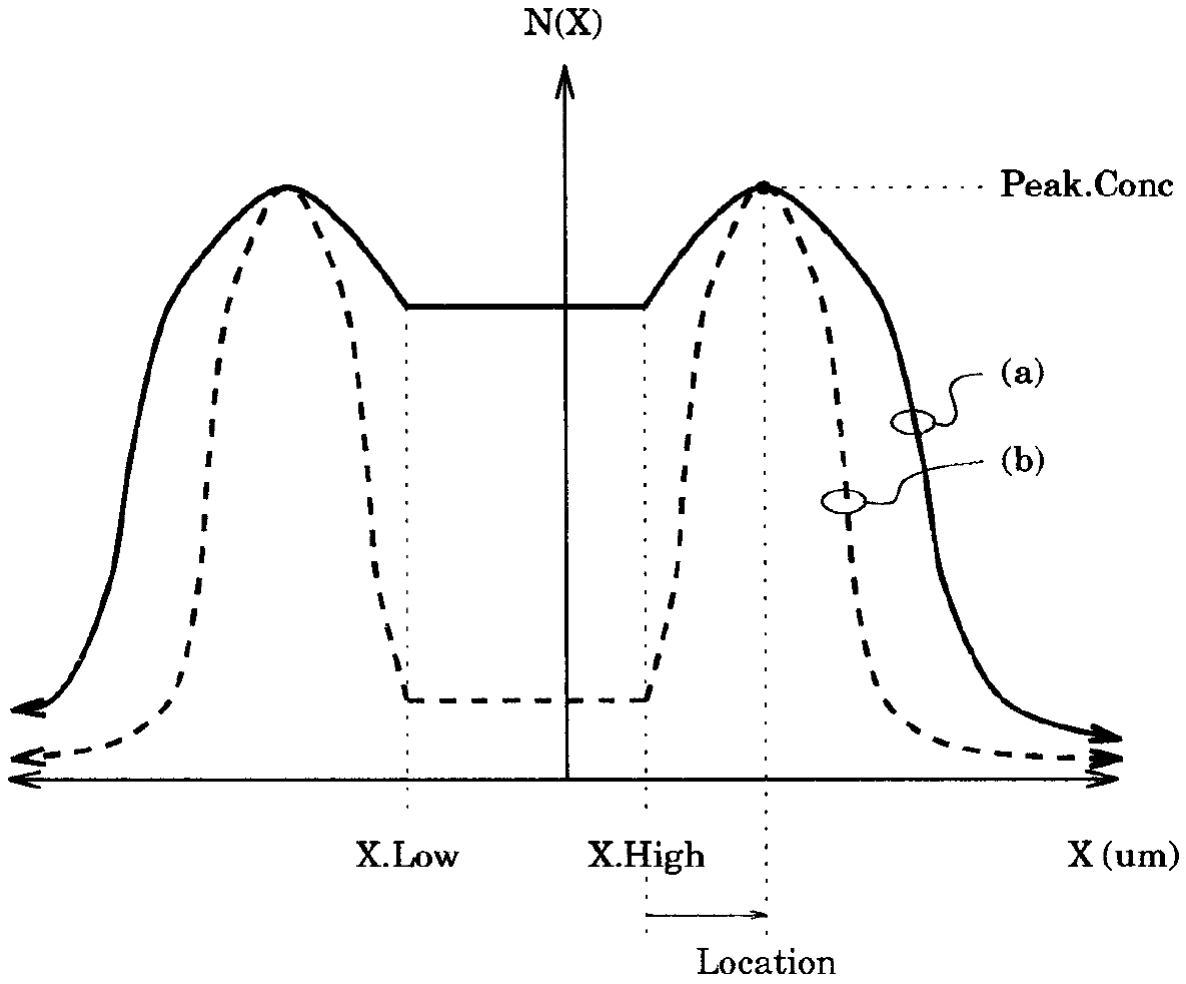

Figure 29.1: 1D doping profiles with location > 0.

should coincide with a region of constant concentration in the device. For uniform profiles its boundaries default to the mesh boundaries. For the other profiles the constant box starts as a point and only acquires width or height if both the appropriate edges are specified. The location of the peak of the primary profile can be moved away from the edge of the constant box. A positive location places the peak outside the constant box (cf. Fig. 29.1), and a negative value puts it inside the constant box (cf. Fig. 29.2). The concentration in the constant box is then equal to the value of the profile when it intersects the edge of the constant box. The argument of the profile function is a distance expressed in terms of the characteristic length (by default equal to $1\mu m$). The longer this length, the more gradually the profile will change. For example, in Fig. A.1 and Fig A.2, the profiles marked (a) have characteristic lengths twice those of the profiles marked (b). The location and characteristic length for the lateral profile are multiplied by the lateral ratio. This allows the use of different length scales for the primary and lateral profiles. For rotated profiles, this scaling is taken into account, and the profile contours are elliptical rather than circular.

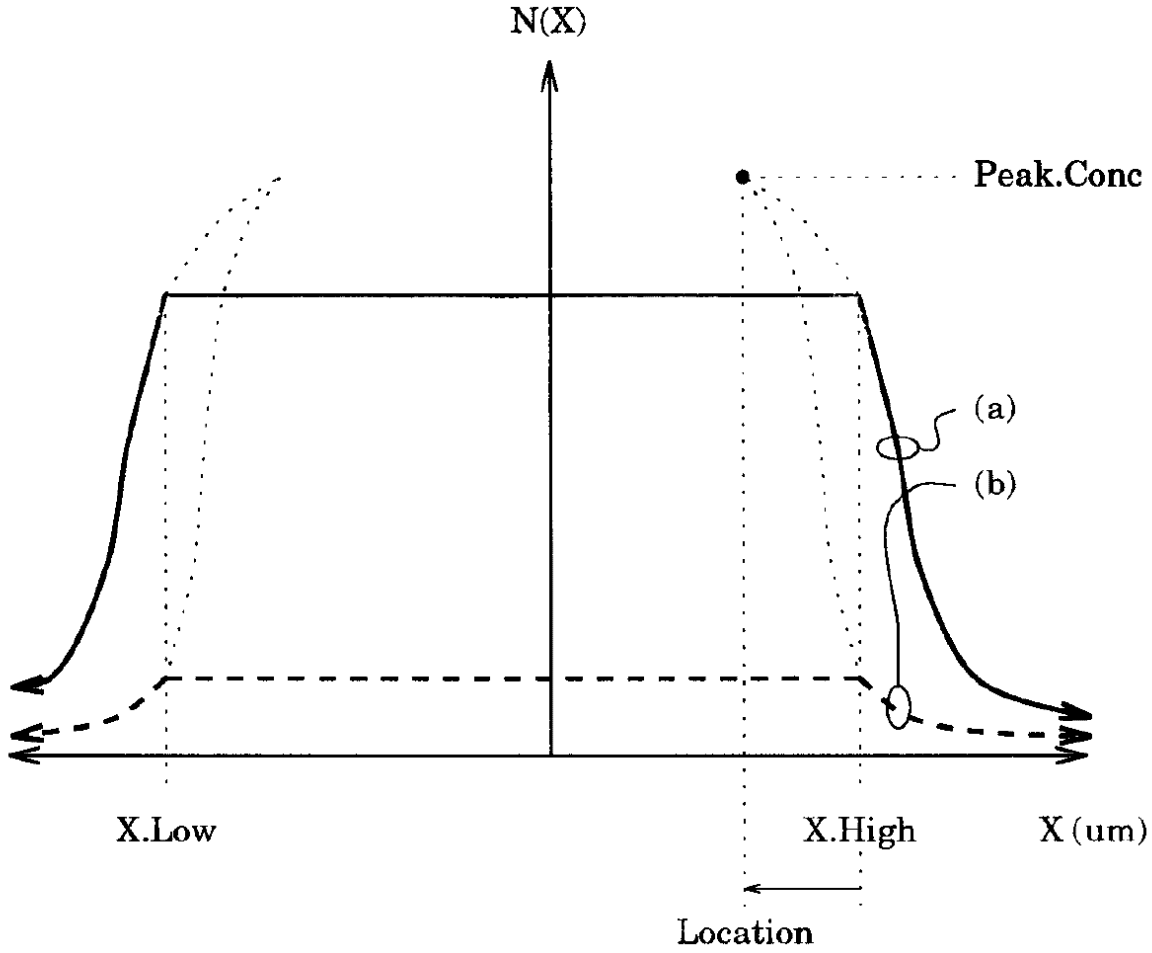

Figure 29.2: 1D doping profiles with location < 0.

29.6.2 PARAMETERS

Name	Type	Description
Domains	Int List	List of domains to dope
Uniform: Linear: Erfc: Exponential: Suprem3: Ascii: Ascii Suprem3	Flag	Primary profile type
InFile	String	Name of Suprem3, Ascii or Ascii Suprem3 input file
Lat.Rotate: Lat.Unif: Lat.Lin: Lat.Gauss: Lat.Erfc: Lat.Exp	Flag	Lateral profile type
X.Axis:Y.Axis	Flag	Primary profile direction
N.Type: P.Type: Donor: Acceptor: Phosphorus: Arsenic: Antimony: Boron	Flag	Impurity type
X.Low	Real	Lowest X location of constant box, (μm)
X.High	Real	Highest X location of constant box, (μm)
Y.Low	Real	Lowest Y location of constant box, (μm)
Y.High	Real	Highest Y location of constant box, (μm)
Conic | Peak.conic	Real	Dopant concentration, (cm^{-3})
Location | Range	Real	Location of profile edge/peak, (μm)
Char.Length	Real	Characteristic length of profile, (μm)
Ratio.Lat	Real	Ratio of lateral to primary distances

29.6.3 EXAMPLES

This first example adds a uniform background P-type doping of $1.0 \times 10^{16} cm^{-3}$ to an entire device:

```
doping uniform p.type conc=1.0e16
```

A Gaussian implantation with rotated lateral falloff, such as might be used for a MOSFET source, is then added:

```
doping gauss lat.rotate n.type conc=1.0e19
+ x.l=0.0 x.h=0.5 y.l=0.0 y.h=0.2 ratio=0.7
```

Alternatively, an error-function falloff could be used:

```
doping gauss lat.erfc conc=1.0e19
+ x.l=0.0 x.h=0.5 y.l=0.0 y.h=0.2 ratio=0.7
```

Finally, the MOSFET channel implant is extracted from an ASCII-format SUPREM3 file. The lateral profile is uniform, so that the implant is confined between $X = 1\mu m$ and $X = 3\mu m$. The profile begins at $Y = 0\mu m$ (the high Y value defaults equal to the low Y value):

```
doping ascii suprem3 infile=implant.s3 lat.unif boron
+ x.l=1.0 x.h=3.0 y.l=0.0
```

29.6.4 SEE ALSO

domain, mobility, contact, boundary

29.7 ELECTRODE

Set location of a contact to the device

SYNOPSIS

```
electrode [number] [position]
```

29.7.1 DESCRIPTION

Each device has several electrodes which are used to connect the device to the rest of the circuit. The number of electrodes depends on the type of device. For example, a MOSFET needs 4 electrodes. A particular electrode can be identified by its position in the list of circuit nodes on the device element line. For example, the drain node of a MOSFET is electrode number 1, while the bulk node is electrode number 4. Electrodes for which an ID number has not been specified are assigned values sequentially in the order they appear in the input file.

For lD devices, the positions of two of the electrodes are predefined to be at the ends of the simulation mesh. The first electrode is at the low end of the mesh, and the last electrode is at the high end. The position of the special lD BJT base contact is set on the options card. Thus, electrode cards are used exclusively for 2D devices.

Each card associates a portion of the simulation mesh with a particular electrode. In contrast to domains, which are specified only in terms of boxes, electrodes can also be specified in terms of line segments. Boxes and segments for the same electrode do not have to overlap. If they don't, it is assumed that the electrode is wired together outside the area covered by the simulation mesh. However, pieces of different electrodes must not overlap, since this would represent a short circuit. Each electrode box or segment can be specified in terms of the locations or mesh-indices of its boundaries. A missing value defaults to the corresponding mesh boundary.

29.7.2 PARAMETERS

Name	Type	Description
Number	Integer	ID number of this domain
X.Low	Real	Lowest X location of electrode, (μm)
:IX.Low	Integer	Lowest X mesh-index of electrode
X.High	Real	Highest X location of electrode, (μm)
:IX.High	Integer	Highest X mesh-index of electrode
Y.Low	Real	Lowest Y location of electrode, (μm)
:IY.Low	Integer	Lowest Y mesh-index of electrode
Y.High	Real	Highest Y location of electrode, (μm)
:IY.High	Integer	Highest Y mesh-index of electrode

29.7.3 EXAMPLES

The following shows how the four contacts of a MOSFET might be specified:

```
* DRAIN
electrode x.l=0.0 x.h=0.5 y.l=0.0 y.h=0.0
* GATE
electrode x.l=1.0 x.h=3.0 iy.l=0 iy.h=0
* SOURCE
electrode x.l=3.0 x.h=4.0 y.l=0.0 y.h=0.0
* BULK
electrode x.l=0.0 x.h=4.0 y.l=2.0 y.h=2.0
```

The numbering option can be used when specifying bipolar transistors with dual base contacts:

```
* EMITTER
electrode num=3 x.l=1.0 x.h=2.0 y.l=0.0 y.h=0.0
* BASE
electrode num=2 x.l=0.0 x.h=0.5 y.l=0.0 y.h=0.0
electrode num=2 x.l=2.5 x.h=3.0 y.l=0.0 y.h=0.0
* COLLECTOR
electrode num=1 x.l=0.0 x.h=3.0 y.l=1.0 y.h=1.0
```

29.7.4 SEE ALSO

domain, contact

29.8 END

Terminate processing of a device definition

SYNOPSIS

```
end
```

29.8.1 DESCRIPTION

The end card stops processing of a device definition. It may appear anywhere within a definition. Subsequent continuation lines of the definition will be ignored. If no end card is supplied, all the cards will be processed.

29.9 MATERIAL

Specify physical properties of a material

SYNOPSIS

```
material number type [physical-constants]
```

29.9.1 DESCRIPTION

The material card is used to create an entry in the list of materials used in a device. Each entry needs a unique identification number and the type of the material. Default values are assigned to the physical properties of the material. Most material parameters are accessible either here or on the `mobility` or `contact` cards. However, some parameters remain inaccessible (e.g. the ionization coefficient parameters). Parameters for most physical effect models are collected here. Mobility parameters are handled separately by the `mobility` card. Properties of electrode materials are set using the `contact` card.

29.9.2 PARAMETERS

Name	Type	Description
Number	Integer	ID number of this material
Semiconductor : Silicon : Polysilicon : GaAs : Insulator : Oxide : Nitride	Flag	Type of this material
Affinity	Real	Electron affinity (eV)
Permittivity	Real	Dielectric permittivity (F/cm)
Nc	Real	Conduction band density (cm^{-3})
Nv	Real	Valence band density (cm^{-3})
Eg	Real	Energy band gap (eV)
dEg.dT	Real	Bandgap narrowing with temperature ($eV/^{\circ}K$)
Eg.Tref	Real	Bandgap reference temperature, (°K)
dEg.dN	Real	Bandgap narrowing with N doping, (eV/cm^{-3})
Eg.Nref	Real	Bandgap reference concentration - N type, (cm^{-3})
dEg.dP	Real	Bandgap narrowing with P doping, (eV/cm^{-3})
Eg.Pref	Real	Bandgap reference concentration - P type, (cm^{-3})
TN	Real	SRH lifetime - electrons, (sec)
SRH.Nref	Real	SRH reference concentration - electrons (cm^{-3})
TP	Real	SRH lifetime - holes, (sec)
SRH.Pref	Real	SRH reference concentration - holes (cm^{-3})
CN	Real	Auger coefficient - electrons (cm^6/sec)
CP	Real	Auger coefficient - holes (cm^6/sec)
ARichN	Real	Richardson constant - electrons, ($A/\frac{cm^2}{^{\circ}K^2}$)
ARichP	Real	Richardson constant - holes, ($A/\frac{cm^2}{^{\circ}K^2}$)

29.9.3 EXAMPLES

Set the type of material #1 to silicon, then adjust the values of the temperature-dependent bandgap model parameters:

```
material num=1 silicon eg=1.12 deg.dt=4.7e-4 eg.tref=640.0
```

The recombination lifetimes can be set to extremely short values to simulate imperfect semiconductor material:

```
material num=2 silicon tn=1ps tp=1ps
```

29.9.4 SEE ALSO

domain, mobility, contact, boundary

29.10 METHOD

Choose types and parameters of numerical methods

SYNOPSIS

```
method [types] [parameters]
```

29.10.1 DESCRIPTION

The method card controls which numerical methods are used during a simulation and the parameters of these methods. Most of these methods are optimizations that reduce run time, but may sacrifice accuracy or reliable convergence.

For majority-carrier devices such as MOSFETs, one carrier simulations can be used to save simulation time. The systems of equations in AC analysis may be solved using either direct or successive-over-relaxation techniques. Successive-over-relaxation is faster, but at high frequencies, it may fail to converge or may converge to the wrong answer. In some cases, it is desirable to obtain AC parameters as functions of DC bias conditions. If necessary, a one-point AC analysis is performed at a predefined frequency in order to obtain these small-signal parameters. The default for this frequency is 1 Hz. The Jacobian matrix for DC and transient analyses can be simplified by ignoring the derivatives of the mobility with respect to the solution variables. However, the resulting analysis may have convergence problems. Additionally, if they are ignored during AC analyses, incorrect results may be obtained.

A damped Newton method is used as the primary solution technique for the device-level partial differential equations. This algorithm is based on an iterative loop that terminates when the error in the solution is small enough or the iteration limit is reached. Error tolerances are used when determining if the error is “small enough”. The tolerances are expressed in terms of an absolute, solution-independent error and a relative, solution-dependent error. The absolute-error limit can be set on this card. The relative error is computed by multiplying the size of the solution by the circuit level SPICE parameter RELTOL.

29.10.2 Parameters

Name	Type	Description
OneCarrier	Flag	Solve for majority carriers only
AC analysis	String	AC analysis method, (either DIRECT or SOR)
NoMobDeriv	Flag	Ignore mobility derivatives
Frequency	Real	AC analysis frequency, (Hz)
ItLim	Integer	Newton iteration limit
DevTol	Real	Maximum residual error in device equations

29.10.3 Examples

Use one carrier simulation for a MOSFET, and choose direct method AC analysis to ensure accurate, high frequency results:

```
method onec ac.an=direct
```

Tolerate no more than 10^{-10} as the absolute error in device-level equations, and perform no more than 15 Newton iterations in any one loop:

```
method devtol=1e-10 itlim=15
```

29.11 Mobility

Specify types and parameters of mobility models

SYNOPSIS

```
mobility material [carrier] [parameters] [models] [initialize]
```

29.11.1 Description

The mobility model is one of the most complicated models of a material's physical properties. As a result, separate cards are needed to set up this model for a given material.

Mobile carriers in a device are divided into a number of different classes, each of which has different mobility modelling. There are three levels of division. First, electrons and holes are obviously handled separately. Second, carriers in surface inversion or accumulation layers are treated differently than carriers in the bulk. Finally, bulk carriers can be either majority or minority carriers.

For surface carriers, the normal-field mobility degradation model has three user-modifiable parameters. For bulk carriers, the ionized impurity scattering model has four controllable parameters. Different sets of parameters are maintained for each of the four bulk carrier types: majority-electron, minority-electron, majority-hole and minority-hole. Velocity saturation modelling can be applied to both surface and bulk carriers. However, only two sets of parameters are maintained: one for electrons and one for holes. These must be changed on a majority carrier card (i.e. when the majority flag is set).

Several models for the physical effects are available, along with appropriate default values. Initially, a universal set of default parameters usable with all models is provided. These can be overridden by defaults specific to a particular model by setting the initialization flag. These can then be changed directly on the card itself. The bulk ionized impurity models are the Caughey-Thomas (CT) model and the Scharfetter-Gummel (SG) model [CAUG671, [SCHA69]. Three alternative sets of defaults are available for the Caughey-Thomas expression. They are the Arora (AR) parameters for Si [AROR82], the University of Florida (UF) parameters for minority carriers in Si [SOLL90], and a set of parameters appropriate for GaAs (GA). The velocity-saturation models are the Caughey-Thomas (CT) and Scharfetter-Gummel (SG) models for Si, and the PISCES model for GaAs (GA). There is also a set of Arora (AR) parameters for the Caughey-Thomas model.

29.11.2 Parameters

Name	Type	Description
Material	Integer	ID number of material
Electron : Hole	Flag	Mobile carrier
Majority : Minority	Flag	Mobile carrier type
MUS	Real	Maximum surface mobility, (cm2/Vs)
EC.A	Real	Surface mobility 1st-order critical field, (V/cm)
EC.B	Real	Real Surface mobility 2nd-order critical field, (V2/cm2)
MuMax	Real	Maximum bulk mobility, (cm2/Vs)
MuMin	Real	Minimum bulk mobility, (cm2/Vs)
NtRef	Real	Ionized impurity reference concentration, (cm-3)
NtExp	Real	Ionized impurity exponent
Vsat	Real	Saturation velocity, (cm/s)
Vwarm	Real	Warm carrier reference velocity, (cm/s)
ConcModel	String	Ionized impurity model, (CT, AR, UF, SG, Dr GA)
FieldModel	String	Velocity saturation model, (CT, AR, SG, or GA)
Init	Flag	Copy model-specific defaults

29.11.3 Examples

The following set of cards completely updates the bulk mobility parameters for material #1:

```
mobility mat=1 concmod=sg fieldmod=sg
mobility mat=1 elec major mumax=1000.0 mumin=100.0
+ ntref=1.0e16 ntexp=0.8 vsat=1.0e7 vwarm=3.0e6
mobility mat=1 elec minor mumax=1000.0 mumin=200.O
+ ntref=1.0e17 ntexp=0.9
mobility mat=1 hole major mumax=500.0 mumin=50.0
+ ntref=1.0e16 ntexp=0.7 vsat=8.0e6 vwarm=1.0e6
mobility mat=1 hole minor mumax=500.0 mumin=150.0
+ ntref=1.0e17 ntexp=0.8
```

The electron surface mobility is changed by the following:

```
mobility mat=1 elec mus=800.0 ec.a=3.0e5 ec.b=9.0e5
```

Finally, the default Scharfetter-Gummel parameters can be used in Si with the GaAs velocity-saturation model (even though it doesn't make physical sense!):

```
mobility mat=1 init elec major fieldmodel=sg
mobility mat=1 init hole major fieldmodel=sg
mobility mat=1 fieldmodel=ga
```

29.11.4 SEE ALSO

material

29.11.5 BUGS

The surface mobility model does not include temperature-dependence for the transverse-field parameters. Those parameters will need to be adjusted by hand.

29.12 MODELS

Specify which physical models should be simulated

SYNOPSIS

```
models [model flags]
```

29.12.1 DESCRIPTION

The models card indicates which physical effects should be modeled during a simulation. Initially, none of the effects are included. A flag can be set false by preceding by a caret.

29.12.2 Parameters

Name	Type	Description
BGN	Flag	Bandgap narrowing
SRH	Flag	Shockley-Reed-Hall recombination
ConcTau	Flag	Concentration-dependent SRH lifetimes
Auger	Flag	Auger recombination
Avalanche	Flag	Local avalanche generation
TempMob	Flag	Temperature-dependent mobility
ConcMob	Flag	Concentration-dependent mobility
FieldMob	Flag	Lateral-field-dependent mobility
TransMob	Flag	Transverse-field-dependent surface mobility
SurfMob	Flag	Activate surface mobility model

29.12.3 Examples

Turn on bandgap narrowing, and all of the generation-recombination effects:

```
models bgn srh conctau auger aval
```

Amend the first card by turning on lateral- and transverse-field-dependent mobility in surface charge layers, and lateral-field-dependent mobility in the bulk. Also, this line turns avalanche generation modeling off.

```
models surfmob transmob fieldmob ^aval
```

29.12.4 See also

material, mobility

29.12.5 Bugs

The local avalanche generation model for 2D devices does not compute the necessary contributions to the device-level Jacobian matrix. If this model is used, it may cause convergence difficulties and it will cause AC analyses to produce incorrect results.

29.13 OPTIONS

Provide optional device-specific information

SYNOPSIS

```
options [device-type] [initial-state] [dimensions]
    [measurement-temperature]
```

29.13.1 DESCRIPTION

The options card functions as a catch-all for various information related to the circuit-device interface. The type of a device can be specified here, but will be defaulted if none is given. Device type is used primarily to determine how to limit the changes in voltage between the terminals of a device. It also helps determine what kind of boundary conditions are used as defaults for the device electrodes.

A previously calculated state, stored in the named initial-conditions file, can be loaded at the beginning of an analysis. If it is necessary for each instance of a numerical model to start in a different state, then the unique flag can be used to generate unique filenames for each instance by appending the instance name to the given filename. This is the same method used by CIDER to generate unique filenames when the states are originally saved. If a particular state file does not fit. this pattern, the filename can be entered directly on the instance line.

Mask dimension defaults can be set so that device sizes can be specified in terms of area or width. Dimensions for the special lD BJT base contact can also be controlled. The measurement temperature of material parameters, normally taken to be the circuit default, can be overridden.

29.13.2 Parameters

Name	Type	Description
Resistor	Flag	Resistor
: Capacitor	Flag	Capacitor
: Diode	Flag	Diode
: Bipolar|BJT	Flag	Bipolar transistor
: MOSFET	Flag	MOS field-effect transistor
: JFET	Flag	Junction field-effect transistor
: MESFET	Flag	MES field-effect transistor
IC.File	String	Initial-conditions filename
Unique	Flag	Append instance name to filename
DefA	Real	Default Mask Area, (m^2)
DefW	Real	Default Mask Width, (m)
DefL	Real	Default Mask Length, (m)
Base.Area	Real	lD BJT base area relative to emitter area
Base.Length	Real	Real lD BJT base contact length, (µm)
Base.Depth	Real	lD BJT base contact depth, (µm)
TNom	Real	Nominal measurement temperature, (°C)

29.13.3 Examples

Normally, a 'numos' device model is used for MOSFET devices. However, it can be changed into a bipolar-with-substrate-contact model, by specifying a bipolar structure using the other cards, and indicating the device-structure type as shown here. The default length is set to 1.0 µm so that when mask area is specified on the element line it can be devided by this default to obtain the device width.

```
options bipolar defl=1.0
```

Specify that a 1D BJT has base area 1/10th that of the emitter, has an effective depth of 0.2 µm and a length between the internal and external base contacts

```
options base.area=0.1 base.depth=0.2 base.len=1.5
```

If a circuit contains two instances of a bipolar transistor model named 'q1' and 'q2', the following line tells the simulator to look for initial conditions in the 'OP1.q2', respectively. The period in the middle of the names is added automatically:

```
options unique ic.file="OP1"
```

29.13.4 See also

numd, nbjt, numos

29.14 OUTPUT

Identify information to be printed or saved

SYNOPSIS

```
output [debugging-flags] [general-info] [saved-solutions]
```

29.14.1 DESCRIPTION

The output card is used to control the amount of information that is either presented to or saved for the user. Three types of information are available. Debugging information is available as a means to monitor program execution. This is useful during long simulations when one is unsure about whether the program has become trapped at some stage of the simulation. General information about a device such as material parameters and resource usage can be obtained. Finally, information about the internal and external states of a device is available. Since this data is best interpreted using a post-processor, a facility is available for saving device solutions in auxiliary output files. Solution filenames are automatically generated by the simulator. If the named file already exists, the file will be overwritten. A filename unique to a particular circuit or run can be generated by providing a root filename. This root name will be added onto the beginning of the automatically generated name. This feature can be used to store solutions in a directory other than the current one by specifying the root filename as the path of the desired directory. Solutions are only saved for those devices that specify the 'save' parameter on their instance lines.

The various physical values that can be saved are named below. By default, the following values are saved: the doping, the electron and hole concentrations, the potential, the electric field, the electron and hole current densities, and the displacement current density. Values can be added to or deleted from this list by turning the appropriate flag on or off. For vector-valued quantities in two dimensions, both the X and Y components are saved. The vector magnitude can be obtained during post-processing.

Saved solutions can be used in conjunction with the **options** card and instance lines to reuse previously calculated solutions as initial guesses for new solutions.For example, it is typical to initialize the device to a known state prior to beginning any DC transfer curve or operating point analysis. This state is an ideal candidate to be saved for later use when it is known that many analyses will be performed on a particular device structure.

29.14.2 Parameters

Name	Type	Description
All.Debug	Flag	Debug all analyses
OP.Debug	Flag	.OP analyses
DC.Debug	Flag	.DC analyses
TRAN.Debug	Flag	.TRAN analyses
AC.Debug	Flag	.AC analyses
PZ.Debug	Flag	.PZ analyses
Material	Flag	Physical material information
Statistics | Resources	Flag	Resource usage information
RootFile	String	Root of output file names
Psi	Flag	Potential (V)
Equ.Psi	Flag	Equilibrium potential (V)
Vac.Psi	Flag	Vacuum potential (V)
Doping	Flag	Net doping (cm^3)
N.Conc	Flag	Electron concentration (cm^3)
P.Conc	Flag	Hole concentration (cm^3)
PhiN	Flag	Electron quasi-fermi potential (V)
PhiP	Flag	Hole quasi-fermi potential (V)
PhiC	Flag	Conduction band potential (V)
PhiV	Flag	Valence band potential (V)
E.Field	Flag	Electric field (V/cm)
JC	Flag	Conduction current density (A/cm^2)
JD	Flag	Displacement current density (A/cm^2)
JN	Flag	Electron current density (A/cm^2)
JP	Flag	Hole current density (A/cm^2)
JT	Flag	Total current density (A/cm^2)
Unet	Flag	Net recombination ($1/cm^3$ s)
MuN	Flag	Electron mobility (low-field) (cm^2/Vs)
MuP	Flag	Hole mobility (low-field) (cm^2/Vs)

29.14.3 Examples

The following example activates all potentially valuable diagnostic output:

```
output all.debug mater stat
```

Energy band diagrams generally contain the potential, the quasi-fermi levels, the energies and the vacuum energy. The following example enables saving of the r values needed to make energy band diagrams:

```
output phin phjp phic phiv vac.psi
```

Sometimes it is desirable to save certain key solutions, and then reload them subsequent simulations. In such cases only the essential values (9,n, and p 1 saved. This example turns off the nonessential default values (and indicates th ones explicitly):

```
output psi n.conc p.conc ^e.f ^jn ^jp ^jd
```

29.14.4 SEE ALSO

options, numd, nbjt, numos

29.15 TITLE

Provide a label for this device's output

SYNOPSIS

```
title [text]
```

29.15.1 DESCRIPTION

The title card provides a label for use as a heading in various output files. The text can be any length, but titles that fit on a single line will produce more aesthetically pleasing output.

29.15.2 EXAMPLES

Set the title for a minimum gate length NMOSFET in a 1.0μm BiCMOS proces

```
title L=1.0um NMOS Device, 1.0um BiCMOS Process
```

29.15.3 BUGS

The title is currently treated like a comment.

29.16 X.MESH, Y.MESH

Define locations of lines and nodes in a mesh

SYNOPSIS

```
x.mesh position numbering-method [spacing-parameters]
y.mesh position numbering-method [spacing-parameters]
```

29.16.1 DESCRIPTION

The domains of a device are discretized onto a rectangular finite-difference mesh using x.mesh cards for 1D devices, or x.mesh and y.mesh cards for 2D devices. Both uniform and non-uniform meshes can be specified.

A typical mesh for a 2D device is shown in Figure 29.3.

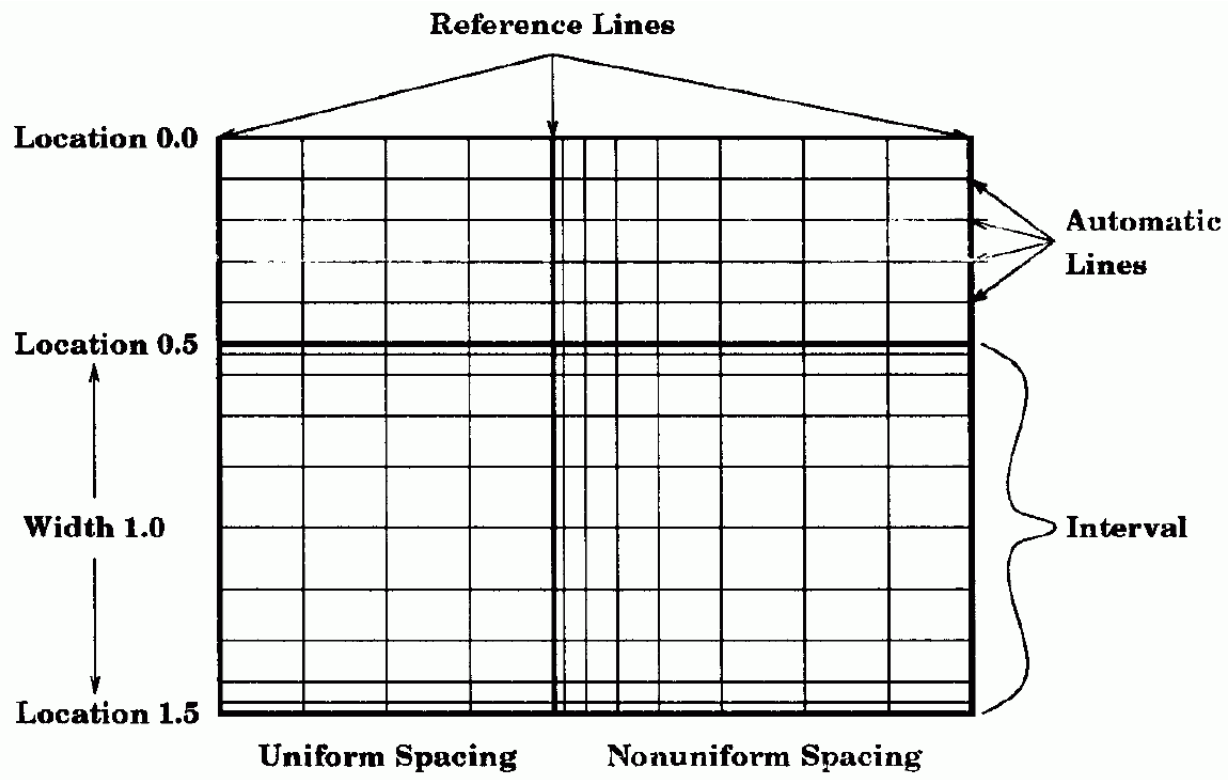

Figure 29.3: Typical mesh for 2D devices

The mesh is divided into intervals by the *reference* lines. The other lines in each interval are automatically generated by CIDER using the mesh spacing parameters. In general, each new mesh card adds one reference line and multiple automatic lines to the mesh. Conceptually, a 1D mesh is similar to a 2D mesh except that there are no reference or automatic lines needed in the second dimension.

The location of a reference line in the mesh must either be given explicitly (using *Location*) or defined implicitly relative to the location of the previous reference line (by using *Width*). (If the first card in either direction is specified using *Width*, an initial reference line is automatically generated at location 0.0.) The line number of the reference line can be given explicitly, in which case the automatic lines are evenly spaced within the interval, and the number of lines is determined from the difference between the current line number and that of the previous reference line. However, if the interval width is given, then the line number is interpreted directly as the number of additional lines to add to the mesh.

For a nonuniformly spaced interval, the number of automatic lines has to be determined using the mesh spacing parameters. Nonuniform spacing is triggered by providing a desired ratio for the lengths of the spaces between adjacent pairs of lines. This ratio should always be greater than one, indicating the ratio of larger spaces to smaller spaces. In addition to the ratio, one

or both of the space widths at the ends of the interval must be provided. If only one is given, it will be the smallest space and the largest space will be at the opposite end of the interval. If both are given, the largest space will be in the middle of the interval. In certain cases it is desirable to limit the growth of space widths in order to control the solution accuracy. This can be accomplished by specifying a maximum space size, but this option is only available when one of the two end lengths is given. Note that once the number of new lines is determined using the desired ratio, the actual spacing ratio may be adjusted so that the spaces exactly fill the interval.

29.16.2 Parameters

Name	Type	Description
Location	Real	Location of this mesh line, (µm)
:Width	Real	Width between this and previous mesh lines, (µm)
Number | Node	Integer	Number of this mesh line
:Ratio	Real	Ratio of sizes of adjacent spaces
H.Start | H1	Real	Space size at start of interval, (µm)
H.End | H2	Real	Space size at end of interval, (µm)
H.Max | H3	Real	Maximum space size inside interval, (µm)

29.16.3 EXAMPLES

A 50 node, uniform mesh for a 5 µm long semiconductor resistor can be specified as:

```
x.mesh loc=0.0 n=1
x.mesh loc=5.0 n=50
```

An accurate mesh for a 1D diode needs fine spacing near the junction. In this example, the junction is assumed to be 0.75 µm deep. The spacing near the diode ends is limited to a maximum of 0.1 µm:

```
x.mesh w=0.75 h.e=0.001 h.m=0.1 ratio=1.5
x.mesh w=2.25 h.s=0.001 h.m=0.1 ratio=1.5
```

The vertical mesh spacing of a MOSFET can generally be specified as uniform through the gate oxide, very fine for the surface inversion layer, moderate down to the so source/drain junction depth, and then increasing all the way to the bulk contact:

```
y.mesh loc=-0.04 node=1
y.mesh loc=0.0 node=6
y.mesh width=0.5 h.start=0.001 h.max=.05 ratio=2.0
y.mesh width=2.5 h.start=0.05 ratio=2.0
```

29.16.4 SEE ALSO

domain

29.17 NUMD

Diode / two-terminal numerical models and elements

SYNOPSIS Model:

```
.MODEL model-name NUMD [level]
+ ...
```

SYNOPSIS Element:

```
DXXXXXXX n1 n2 model-name [geometry] [temperature] [initial-conditions]
```

SYNOPSIS Output:

```
.SAVE [small-signal values]
```

29.17.1 DESCRIPTION

NUMD is the name for a diode numerical model. In addition, this same model can be used to simulate other two-terminal structures such as semiconductor resistors and MOS capacitors. See the **options** card for more information on how to customize the device type.

Both 1D and 2D devices are supported. These correspond to the LEVEL=l and LEVEL=2 models, respectively. If left unspecified, it is assumed that the device is one-dimensional.

All numerical two-terminal element names begin with the letter 'D. The element name is then followed by the names of the positive (n1) and negative (n2) nodes. After this must come the name of the model used for the element. The remaining information can come in any order. The layout dimensions of an element are specified relative to the geometry of a default device. For 1D devices, the default device has an area of $1m^2$, and for 2D devices, the default device has a width of 1 m. However, these defaults can be overridden on an **options** card. The operating temperature of a device can be set independently from that of the rest of the circuit in order to simulate non-isothermal circuit operation. Finally, the name of a file containing an initial state for the device can be specified. Remember that if the filename contains capital letters, they must be protected by surrounding the filename with double quotes. Alternatively, the device can be placed in an OFF state (thermal equilibrium) at the beginning of the analysis. For more information on the use of initial conditions, see the NGSPICE User's Manual, chapt. 7.1.

In addition to the element input parameters, there are output-only parameters that can be shown using the NGSPICE `show` command (17.5.60) or captured using the `save/.SAVE` (17.5.51/15.5.1) command. These parameters are the elements of the indefinite conductance (G), capacitance (C), and admittance (Y) matrices where $Y = G + j\omega C$. By default, the parameters are computed at 1 Hz. Each element is accessed using the name of the matrix (g, c or y) followed by the node indices of the output terminal and the input terminal (e.g. g11). Beware that names are case-sensitive for `save/show`, so lower-case letters must be used.

29.17.2 Parameters

Name	Type	Description
Level	Integer	Dimensionality of numerical model
Area	Real	Multiplicative area factor
W	Real	Multiplicative width factor
Temp	Real	Element operating temperature
IC.File	String	Initial-conditions filename
Off	Flag	Device initially in OFF state
gIJ	Flag	Conductance element G_{ij}, (Ω)
cIJ	Flag	Capacitance element C_{ij}, (F)
yIJ	Flag	Admittance element Y_{ij}, (Ω)

29.17.3 EXAMPLES

A one-dimensional numerical switching-diode element/model pair with an area twice that of the default device (which has a size of 1 µm x 1 µm) can be specified using:

```
DSWITCH 1 2 M_SWITCH_DIODE AREA=2
.MODEL M_SWITCH_DIODE NUMD
+ options defa=1p ...
+ ...
```

A two-dimensional two-terminal MOS capacitor with a width of 20 µm and an initial condition of 3 V is created by:

```
DMOSCAP 11 12 M_MOSCAP W=20um IC=3v
.MODEL M_MOSCAP NUMD LEVEL=2
+ options moscap defw=1m
+ ...
```

The next example shows how both the width and area factors can be used to create a power diode with area twice that of a 6µm-wide device (i.e. a 12µm-wide device). The device is assumed to be operating at a temperature of 100°C:

```
D1 POSN NEGN POWERMOD AREA=2 W=6um TEMP=100.0
.MODEL POWERMOD NUMD LEVEL=2
+ ...
```

This example saves all the small-signal parameters of the previous diode:

```
.SAVE @d1[g11] @d1[g12] @d1[g21] @d1[g22]
.SAVE @d1[c11] @d1[c12] @d1[c21] @d1[c22]
.SAVE @d1[y11] @d1[y12] @d1[y21] @d1[y22]
```

29.17.4 SEE ALSO

options, output

29.17.5 BUGS

Convergence problems may be experienced when simulating MOS capacitors due to singularities in the current-continuity equations.

29.18 NBJT

Bipolar / three-terminal numerical models and elements

SYNOPSIS Model:

```
.MODEL model-name NBJT [level]
+ ...
```

SYNOPSIS Element:

```
QXXXXXXX n1 n2 n3 model-name [geometry]
+ [temperature] [initial-conditions]
```

SYNOPSIS Output:

```
.SAVE [small-signal values]
```

29.18.1 DESCRIPTION

NBJT is the name for a bipolar transistor numerical model. In addition, the 2D model can be used to simulate other three-terminal structures such as a JFET or MESFET. However, the 1D model is customized with a special base contact, and cannot be used for other purposes. See the options card for more information on how to customize the device type and setup the 1D base contact.

Both 1"and 2D devices are supported. These correspond to the LEVEL=l and models, respectively. If left unspecified, it is assumed that the device is one-dimensional.

All numerical three-terminal element names begin with the letter 'Q'. If the device is a bipolar transistor, then the nodes are specified in the order: collector (nl), base (n2), emitter (n3). For a JFET or MESFET, the node order is: drain (n1), gate (n2), source (n3). After this must come the name of the model used for the element. The remaining information can come in any order. The layout dimensions of an element are specified relative to the geometry of a default device. For the 1D BJT, the default device has an area of $1m^2$, and for 2D devices, the default device has a width of 1m. In addition, it is assumed that the default 1D BJT has a base contact with area equal to the emitter area, length of 1μm and a depth automatically determined from the device doping profile. However, all these defaults can be overridden on an options card.

The operating temperature of a device can be set independently from the rest of that of the circuit in order to simulate non-isothermal circuit operation. Finally, the name of a file containing an

initial state for the device can be specified. Remember that if the filename contains capital letters, they must be protected by surrounding the filename with double quotes. Alternatively, the device can be placed in an OFF state (thermal equilibrium) at the beginning of the analysis. For more information on the use of initial conditions, see the NGSPICE User's Manual.

In addition to the element input parameters, there are output-only parameters that can be shown using the SPICE showcommand or captured using the `save/.SAVE` command. These parameters are the elements of the indefinite conductance (G), capacitance (C), and admittance (Y) matrices where Y = G +jwC. By default, the parameters are computed at 1Hz. Each element is accessed using the name of the matrix (g, c or y) followed by the node indices of the output terminal and the input terminal (e.g. g11). Beware that parameter names are case-sensitive for `save/show`, so lower-case letters must be used.

29.18.2 Parameters

Name	Type	Description
Level	Integer	Dimensionality of numerical model
Area	Real	Multiplicative area factor
W	Real	Multiplicative width factor
Temp	Real	Element operating temperature
IC.File	String	Initial-conditions filename
Off	Flag	Device initially in OFF state
gIJ	Flag	Conductance element G_{ij}, (Ω)
cIJ	Flag	Capacitance element C_{ij}, (F)
yIJ	Flag	Admittance element Y_{ij}, (Ω)

29.18.3 EXAMPLES

A one-dimensional numerical bipolar transistor with an emitter stripe 4 times as wide as the default device is created using:

```
Q2 1 2 3 M_BJT AREA=4
```

This example saves the output conductance (go), transconductance (gm) and input conductance (gpi) of the previous transistor in that order:

```
.SAVE @q2[g11] @q2[g12] @q2[g22]
```

The second example is for a two-dimensional JFET with a width of 5pm and initial conditions obtained from file "IC.jfet":

```
QJ1 11 12 13 M_JFET W=5um IC.FILE="IC.jfet"
.MODEL M_JFET NBJT LEVEL=2
+ options jfet
+ ...
```

A final example shows how to use symmetry to simulate half of a 2D BJT, avoiding having the user double the area of each instance:

```
Q2 NC2 NB2 NE2 BJTMOD AREA=1
Q3 NC3 NB3 NE3 BJTMOD AREA=1
.MODEL BJTMOD NBJT LEVEL=2
+ options defw=2um
+ * Define half of the device now
+ ...
```

29.18.4 SEE ALSO

options, output

29.18.5 BUGS

MESFETs cannot be simulated properly yet because Schottky contacts have not been implemented.

29.19 NUMOS

MOSFET / four-terminal numerical models and elements

SYNOPSIS Model:

```
.MODEL model-name NUMOS [level]
+ ...
```

SYNOPSIS Element:

```
MXXXXXXX n1 n2 n3 n4 model-name [geometry]
+ [temperature] [initial-conditions]
```

SYNOPSIS Output:

```
.SAVE [small-signal values]
```

29.19.1 DESCRIPTION

NUMOS is the name for a MOSFET numerical model. In addition, the 2D model can be used to simulate other four-terminal structures such as integrated bipolar and JFET devices with substrate contacts. However, silicon controlled rectifiers (SCRs) cannot be simulated because of the snapback in the transfer characteristic. See the **options** card for more information on how to customize the device type. The LEVEL parameter of two- and three-terminal devices is not needed, because only 2D devices are supported. However, it will accepted and ignored if provided.

All numerical four-terminal element names begin with the letter 'M'. If the device is a MOSFET, or JFET with a bulk contact, then the nodes are specified in the order: drain (n1), gate (n2), source (n3), bulk (n4). If the device is a BJT, the node order is: collector (n1), base (n2), emitter (n3), substrate (n4). After this must come the name of the model 1used for the element. The remaining information can come in any order. The layout dimensions of an element are specified relative to the geometry of a default device. The default device has a width of lm. However, this default can be overridden on an **options** card. In addition, the element line will accept a length parameter, L, but does not use it in any calculations. This is provided to enable somewhat greater compatibility between numerical MOSFET models and the standard SPICE3 compact MOSFET models.

The operating temperature of a device can be set independently from that of the rest of the circuit in order to simulate non-isothermal circuit operation. Finally, the name of a file containing an initial state for the device can be specified. Remember that if the filename contains capital letters, they must be protected by surrounding the filename with double quotes. Alternatively, the device can be placed in an OFF state (thermal equilibrium) at the beginning of the analysis. For more information on the use of initial conditions, see the NGSPICE User's Manual.

In addition to the element input parameters, there are output-only parameters that can be shown using the SPICE `show` command or captured using the `save/.SAVE` command.

These parameters are the elements of the indefinite conductance (G), capacitance (C), and admittance (Y) matrices where Y = G+jwC. By default, the parameters are computed at 1 Hz. Each element is accessed using the name of the matrix (g, c or y) followed by the node indices of the output terminal and the input terminal (e.g. g11). Beware that parameter names are case-sensitive for `save/show`, so lower-case letters must be used.

29.19.2 Parameters

Name	Type	Description
Level	Integer	Dimensionality of numerical model
Area	Real	Multiplicative area factor
W	Real	Multiplicative width factor
L	Real	Unused length factor
Temp	Real	Element operating temperature
IC.File	String	Initial-conditions filename
Off	Flag	Device initially in OFF state
gIJ	Flag	Conductance element G_{ij}, (Ω)
cIJ	Flag	Capacitance element C_{ij}, (F)
yIJ	Flag	Admittance element Y_{ij}, (Ω)

29.19.3 EXAMPLES

A numerical MOSFET with a gate width of 5µm and length of 1µm is described below. However, the model can only be used for lµm length devices, so the length parameter is redundant. The device is initially biased near its threshhold by taking an initialstate from the file "NM1.vth".

```
M1 1 2 3 4 M_NMOS_1UM W=5um L=1um IC.FILE="NM1.vth"
.MODEL MNMOS_1UM NUMOS
+ * Description of a lum device
+ ...
```

This example saves the definite admittance matrix of the previous MOSFET where the source terminal (3) is used as the reference. (The definite admittance matrix is formed by deleting the third row and column from the indefinite admittance matrix.)

```
.SAVE @m1[y11] @m1[y12] @m1[y14]
.SAVE @m1[y21] @m1[y22] @m1[y24]
.SAVE @m1[y41] @m1[y42] @m1[y44]
```

Bipolar transistors are usually specified in terms of their area relative to a unit device. The following example creates a unit-sized device:

```
MQ1 NC NB NE NS N_BJT
.MODEL M_BJT NUMOS LEVEL=2
+ options bipolar defw=5um
+ ...
```

29.19.4 SEE ALSO

options, output

29.20 Cider examples

The original Cider User's manual, in its Appendix A, lists a lot of examples, starting at page 226. We do not reproduce these pages here, but ask you to refer to the original document. If you experience any difficulties downloading it, please send a note to the ngspice users' mailing list.

Part IV

Appendices

Chapter 30

Model and Device Parameters

The following tables summarize the parameters available on each of the devices and models in ngspice. There are two tables for each type of device supported by ngspice. Input parameters to instances and models are parameters that can occur on an instance or model definition line in the form `keyword=value` where `keyword` is the parameter name as given in the tables. Default input parameters (such as the resistance of a resistor or the capacitance of a capacitor) obviously do not need the keyword specified.

Output parameters are those additional parameters which are available for many types of instances for the output of operating point and debugging information. These parameters are specified as `@device[keyword]` and are available for the most recent point computed or, if specified in a `.save` statement, for an entire simulation as a normal output vector. Thus, to monitor the gate-to-source capacitance of a MOSFET, a command

```
save @ml[cgs]
```

given before a transient simulation causes the specified capacitance value to be saved at each time-point, and a subsequent command such as

```
plot @ml[cgs]
```

produces the desired plot. (Note that the show command does not use this format).

Some variables are listed as both input and output, and their output simply returns the previously input value, or the default value after the simulation has been run. Some parameter are input only because the output system can not handle variables of the given type yet, or the need for them as output variables has not been apparent. Many such input variables are available as output variables in a different format, such as the initial condition vectors that can be retrieved as individual initial condition values. Finally, internally derived values are output only and are provided for debugging and operating point output purposes.

If you want to access a device parameter of a device used inside of a subcircuit, you may use the syntax as shown below.

General form:

```
@device_identifier.subcircuit_name.<subcircuit_name_nn>
+.device_name[parameter]
```

Example input file:

```
* transistor output characteristics
* two nested subcircuits
vdd d1 0 2.0
vss vsss 0 0
vsig g1 vsss 0
xmos1 d1 g1 vsss level1
.subckt level1 d3 g3 v3
xmos2  d3 g3 v3 level2
.ends
.subckt level2 d4 g4 v4
m1 d4 g4 v4 v4 nmos w=1e-5 l=3.5e-007
.ends
.dc vdd 0 5 0.1 vsig 0 5 1
.control
save all @m.xmos1.xmos2.m1[vdsat]
run
plot vss#branch   $ current measured at the top level
plot @m.xmos1.xmos2.m1[vdsat]
.endc
.MODEL NMOS NMOS  LEVEL    = 8
+VERSION = 3.2.4  TNOM     = 27  TOX      = 7.4E-9
.end
```

The device identifier is the first letter extracted from the device name, e.g. m for a MOS transistor.

Please note that the parameter tables presented below do not provide the detailed information available about the parameters provided in the section on each device and model, but are provided as a quick reference guide.

30.1 Elementary Devices

30.1.1 Resistor

30.1.1.1 Resistor instance parameters

#	Name	Direction	Type	Description
1	resistance	InOut	real	Resistance
10	ac	InOut	real	AC resistance value
8	temp	InOut	real	Instance operating temperature
14	dtemp	InOut	real	Instance temperature difference with the rest of the circuit
3	l	InOut	real	Length
2	w	InOut	real	Width
12	m	InOut	real	Multiplication factor
16	tc	InOut	real	First order temp. coefficient
16	tc1	InOut	real	First order temp. coefficient
17	tc2	InOut	real	Second order temp. coefficient
13	scale	InOut	real	Scale factor
15	noisy	InOut	integer	Resistor generate noise
5	sens_resist	In	flag	flag to request sensitivity WRT resistance
6	i	Out	real	Current
7	p	Out	real	Power
206	sens_dc	Out	real	dc sensitivity
201	sens_real	Out	real	dc sensitivity and real part of ac sensitivity
202	sens_imag	Out	real	dc sensitivity and imag part of ac sensitivity
203	sens_mag	Out	real	ac sensitivity of magnitude
204	sens_ph	Out	real	ac sensitivity of phase
205	sens_cplx	Out	complex	ac sensitivity

30.1.1.2 Resistor model parameters

#	Name	Direction	Type	Description
103	rsh	InOut	real	Sheet resistance
105	narrow	InOut	real	Narrowing of resistor
105	dw	InOut	real	
108	short	InOut	real	Shortening of resistor
108	dlr	InOut	real	
101	tc1	InOut	real	First order temp. coefficient
102	tc2	InOut	real	Second order temp. coefficient
104	defw	InOut	real	Default device width
104	w	InOut	real	
109	kf	InOut	real	Flicker noise coefficient
110	af	InOut	real	Flicker noise exponent
107	tnom	InOut	real	Parameter measurement temperature
106	r	In	flag	Device is a resistor model

30.1.2 Capacitor - Fixed capacitor

30.1.2.1 Capacitor instance parameters

#	Name	Direction	Type	Description
1	capacitance	InOut	real	Device capacitance
1	cap	InOut	real	Device capacitance
1	c	InOut	real	Device capacitance
2	ic	InOut	real	Initial capacitor voltage
8	temp	InOut	real	Instance operating temperature
9	dtemp	InOut	real	Instance temperature difference from the rest of the circuit
3	w	InOut	real	Device width
4	l	InOut	real	Device length
11	m	InOut	real	Parallel multiplier
10	scale	InOut	real	Scale factor
5	sens_cap	In	flag	flag to request sens. WRT cap.
6	i	Out	real	Device current
7	p	Out	real	Instantaneous device power
206	sens_dc	Out	real	dc sensitivity
201	sens_real	Out	real	real part of ac sensitivity
202	sens_imag	Out	real	dc sens. & imag part of ac sens.
203	sens_mag	Out	real	sensitivity of ac magnitude
204	sens_ph	Out	real	sensitivity of ac phase
205	sens_cplx	Out	complex	ac sensitivity

30.1.2.2 Capacitor model parameters

#	Name	Direction	Type	Description
112	cap	InOut	real	Model capacitance
101	cj	InOut	real	Bottom Capacitance per area
102	cjsw	InOut	real	Sidewall capacitance per meter
103	defw	InOut	real	Default width
113	defl	InOut	real	Default length
105	narrow	InOut	real	width correction factor
106	short	InOut	real	length correction factor
107	tc1	InOut	real	First order temp. coefficient
108	tc2	InOut	real	Second order temp. coefficient
109	tnom	InOut	real	Parameter measurement temperature
110	di	InOut	real	Relative dielectric constant
111	thick	InOut	real	Insulator thickness
104	c	In	flag	Capacitor model

30.1.3 Inductor - Fixed inductor

30.1.3.1 Inductor instance parameters

#	Name	Direction	Type	Description
1	inductance	InOut	real	Inductance of inductor
2	ic	InOut	real	Initial current through inductor
5	sens_ind	In	flag	flag to request sensitivity WRT inductance
9	temp	InOut	real	Instance operating temperature
10	dtemp	InOut	real	Instance temperature difference with the rest of the circuit
8	m	InOut	real	Multiplication Factor
11	scale	InOut	real	Scale factor
12	nt	InOut	real	Number of turns
3	flux	Out	real	Flux through inductor
4	v	Out	real	Terminal voltage of inductor
4	volt	Out	real	
6	i	Out	real	Current through the inductor
6	current	Out	real	
7	p	Out	real	instantaneous power dissipated by the inductor
206	sens_dc	Out	real	dc sensitivity sensitivity
201	sens_real	Out	real	real part of ac sensitivity
202	sens_imag	Out	real	dc sensitivity and imag part of ac sensitivty
203	sens_mag	Out	real	sensitivity of AC magnitude
204	sens_ph	Out	real	sensitivity of AC phase
205	sens_cplx	Out	complex	ac sensitivity

30.1.3.2 Inductor model parameters

#	Name	Direction	Type	Description
100	ind	InOut	real	Model inductance
101	tc1	InOut	real	First order temp. coefficient
102	tc2	InOut	real	Second order temp. coefficient
103	tnom	InOut	real	Parameter measurement temperature
104	csect	InOut	real	Inductor cross section
105	length	InOut	real	Inductor length
106	nt	InOut	real	Model number of turns
107	mu	InOut	real	Relative magnetic permeability
108	l	In	flag	Inductor model

30.1.4 Mutual - Mutual Inductor

30.1.4.1 Mutual instance parameters

#	Name	Direction	Type	Description
401	k	InOut	real	Mutual inductance
401	coefficient	InOut	real	
402	inductor1	InOut	instance	First coupled inductor
403	inductor2	InOut	instance	Second coupled inductor
404	sens_coeff	In	flag	flag to request sensitivity WRT coupling factor
606	sens_dc	Out	real	dc sensitivity
601	sens_real	Out	real	real part of ac sensitivity
602	sens_imag	Out	real	dc sensitivity and imag part of ac sensitivty
603	sens_mag	Out	real	sensitivity of AC magnitude
604	sens_ph	Out	real	sensitivity of AC phase
605	sens_cplx	Out	complex	mutual model parameters:

30.2 Voltage and current sources

30.2.1 ASRC - Arbitrary source

30.2.1.1 ASRC instance parameters

#	Name	Direction	Type	Description
2	i	In	parsetree	Current source
1	v	In	parsetree	Voltage source
7	i	Out	real	Current through source
6	v	Out	real	Voltage across source
3	pos_node	Out	integer	Positive Node
4	neg_node	Out	integer	Negative Node

30.2.2 Isource - Independent current source

30.2.2.1 Isource instance parameters

#	Name	Direction	Type	Description
1	dc	InOut	real	DC value of source
2	acmag	InOut	real	AC magnitude
3	acphase	InOut	real	AC phase
5	pulse	In	real vector	Pulse description
6	sine	In	real vector	Sinusoidal source description
6	sin	In	real vector	Sinusoidal source description
7	exp	In	real vector	Exponential source description
8	pwl	In	real vector	Piecewise linear description
9	sffm	In	real vector	Single freq. FM description
21	am	In	real vector	Amplitude modulation description
10	neg_node	Out	integer	Negative node of source
11	pos_node	Out	integer	Positive node of source
12	acreal	Out	real	AC real part
13	acimag	Out	real	AC imaginary part
14	function	Out	integer	Function of the source
15	order	Out	integer	Order of the source function
16	coeffs	Out	real vector	Coefficients of the source
20	v	Out	real	Voltage across the supply
17	p	Out	real	Power supplied by the source
4	ac	In	real vector	AC magnitude,phase vector
1	c	In	real	Current through current source
22	current	Out	real	Current in DC or Transient mode
18	distof1	In	real vector	f1 input for distortion
19	distof2	In	real vector	f2 input for distortion

30.2.3 Vsource - Independent voltage source

30.2.3.1 Vsource instance parameters

#	Name	Direction	Type	Description
1	dc	InOut	real	D.C. source value
3	acmag	InOut	real	A.C. Magnitude
4	acphase	InOut	real	A.C. Phase
5	pulse	In	real vector	Pulse description
6	sine	In	real vector	Sinusoidal source description
6	sin	In	real vector	Sinusoidal source description
7	exp	In	real vector	Exponential source description
8	pwl	In	real vector	Piecewise linear description
9	sffm	In	real vector	Single freq. FM descripton
22	am	In	real vector	Amplitude modulation descripton
16	pos_node	Out	integer	Positive node of source
17	neg_node	Out	integer	Negative node of source
11	function	Out	integer	Function of the source
12	order	Out	integer	Order of the source function
13	coeffs	Out	real vector	Coefficients for the function
14	acreal	Out	real	AC real part
15	acimag	Out	real	AC imaginary part
2	ac	In	real vector	AC magnitude, phase vector
18	i	Out	real	Voltage source current
19	p	Out	real	Instantaneous power
20	distof1	In	real vector	f1 input for distortion
21	distof2	In	real vector	f2 input for distortion
23	r	In	real	pwl repeat start time value
24	td	In	real	pwl delay time value

30.2.4 CCCS - Current controlled current source

30.2.4.1 CCCS instance parameters

#	Name	Direction	Type	Description
1	gain	InOut	real	Gain of source
2	control	InOut	instance	Name of controlling source
6	sens_gain	In	flag	flag to request sensitivity WRT gain
4	neg_node	Out	integer	Negative node of source
3	pos_node	Out	integer	Positive node of source
7	i	Out	real	CCCS output current
9	v	Out	real	CCCS voltage at output
8	p	Out	real	CCCS power
206	sens_dc	Out	real	dc sensitivity
201	sens_real	Out	real	real part of ac sensitivity
202	sens_imag	Out	real	imag part of ac sensitivity
203	sens_mag	Out	real	sensitivity of ac magnitude
204	sens_ph	Out	real	sensitivity of ac phase
205	sens_cplx	Out	complex	ac sensitivity

30.2.5 CCVS - Current controlled voltage source

30.2.5.1 CCVS instance parameters

#	Name	Direction	Type	Description
1	gain	InOut	real	Transresistance (gain)
2	control	InOut	instance	Controlling voltage source
7	sens_trans	In	flag	flag to request sens. WRT transimpedance
3	pos_node	Out	integer	Positive node of source
4	neg_node	Out	integer	Negative node of source
8	i	Out	real	CCVS output current
10	v	Out	real	CCVS output voltage
9	p	Out	real	CCVS power
206	sens_dc	Out	real	dc sensitivity
201	sens_real	Out	real	real part of ac sensitivity
202	sens_imag	Out	real	imag part of ac sensitivity
203	sens_mag	Out	real	sensitivity of ac magnitude
204	sens_ph	Out	real	sensitivity of ac phase
205	sens_cplx	Out	complex	ac sensitivity

30.2.6 VCCS - Voltage controlled current source

30.2.6.1 VCCS instance parameters

#	Name	Direction	Type	Description
1	gain	InOut	real	Transconductance of source (gain)
8	sens_trans	In	flag	flag to request sensitivity WRT transconductance
3	pos_node	Out	integer	Positive node of source
4	neg_node	Out	integer	Negative node of source
5	cont_p_node	Out	integer	Positive node of contr. source
6	cont_n_node	Out	integer	Negative node of contr. source
2	ic	In	real	Initial condition of controlling source
9	i	Out	real	Output current
11	v	Out	real	Voltage across output
10	p	Out	real	Power
206	sens_dc	Out	real	dc sensitivity
201	sens_real	Out	real	real part of ac sensitivity
202	sens_imag	Out	real	imag part of ac sensitivity
203	sens_mag	Out	real	sensitivity of ac magnitude
204	sens_ph	Out	real	sensitivity of ac phase
205	sens_cplx	Out	complex	ac sensitivity

30.2.7 VCVS - Voltage controlled voltage source

30.2.7.1 VCVS instance parameters

#	Name	Direction	Type	Description
1	gain	InOut	real	Voltage gain
9	sens_gain	In	flag	flag to request sensitivity WRT gain
2	pos_node	Out	integer	Positive node of source
3	neg_node	Out	integer	Negative node of source
4	cont_p_node	Out	integer	Positive node of contr. source
5	cont_n_node	Out	integer	Negative node of contr. source
7	ic	In	real	Initial condition of controlling source
10	i	Out	real	Output current
12	v	Out	real	Output voltage
11	p	Out	real	Power
206	sens_dc	Out	real	dc sensitivity
201	sens_real	Out	real	real part of ac sensitivity
202	sens_imag	Out	real	imag part of ac sensitivity
203	sens_mag	Out	real	sensitivity of ac magnitude
204	sens_ph	Out	real	sensitivity of ac phase
205	sens_cplx	Out	complex	ac sensitivity

30.3 Transmission Lines

30.3.1 CplLines - Simple Coupled Multiconductor Lines

30.3.1.1 CplLines instance parameters

#	Name	Direction	Type	Description
1	pos_nodes	InOut	string vector	in nodes
2	neg_nodes	InOut	string vector	out nodes
3	dimension	InOut	integer	number of coupled lines
4	length	InOut	real	length of lines

30.3.1.2 CplLines model parameters

#	Name	Direction	Type	Description
101	r	InOut	real vector	resistance per length
104	l	InOut	real vector	inductance per length
102	c	InOut	real vector	capacitance per length
103	g	InOut	real vector	conductance per length
105	length	InOut	real	length
106	cpl	In	flag	Device is a cpl model

30.3.2 LTRA - Lossy transmission line

30.3.2.1 LTRA instance parameters

#	Name	Direction	Type	Description
6	v1	InOut	real	Initial voltage at end 1
8	v2	InOut	real	Initial voltage at end 2
7	i1	InOut	real	Initial current at end 1
9	i2	InOut	real	Initial current at end 2
10	ic	In	real vector	Initial condition vector:v1,i1,v2,i2
13	pos_node1	Out	integer	Positive node of end 1 of t-line
14	neg_node1	Out	integer	Negative node of end 1 of t.line
15	pos_node2	Out	integer	Positive node of end 2 of t-line
16	neg_node2	Out	integer	Negative node of end 2 of t-line

30.3.2.2 LTRA model parameters

#	Name	Direction	Type	Description
0	ltra	InOut	flag	LTRA model
1	r	InOut	real	Resistance per meter
2	l	InOut	real	Inductance per meter
3	g	InOut	real	
4	c	InOut	real	Capacitance per meter
5	len	InOut	real	length of line
11	rel	Out	real	Rel. rate of change of deriv. for bkpt
12	abs	Out	real	Abs. rate of change of deriv. for bkpt
28	nocontrol	InOut	flag	No timestep control
32	steplimit	InOut	flag	always limit timestep to 0.8*(delay of line)
33	nosteplimit	InOut	flag	don't always limit timestep to 0.8*(delay of line)
34	lininterp	InOut	flag	use linear interpolation
35	quadinterp	InOut	flag	use quadratic interpolation
36	mixedinterp	InOut	flag	use linear interpolation if quadratic results look unacceptable
46	truncnr	InOut	flag	use N-R iterations for step calculation in LTRAtrunc
47	truncdontcut	InOut	flag	don't limit timestep to keep impulse response calculation errors low
42	compactrel	InOut	real	special reltol for straight line checking
43	compactabs	InOut	real	special abstol for straight line checking

30.3.3 Tranline - Lossless transmission line

30.3.3.1 Tranline instance parameters

#	Name	Direction	Type	Description
1	z0	InOut	real	Characteristic impedance
1	zo	InOut	real	
4	f	InOut	real	Frequency
2	td	InOut	real	Transmission delay
3	nl	InOut	real	Normalized length at frequency given
5	v1	InOut	real	Initial voltage at end 1
7	v2	InOut	real	Initial voltage at end 2
6	i1	InOut	real	Initial current at end 1
8	i2	InOut	real	Initial current at end 2
9	ic	In	real vector	Initial condition vector:v1,i1,v2,i2
10	rel	Out	real	Rel. rate of change of deriv. for bkpt
11	abs	Out	real	Abs. rate of change of deriv. for bkpt
12	pos_node1	Out	integer	Positive node of end 1 of t. line
13	neg_node1	Out	integer	Negative node of end 1 of t. line
14	pos_node2	Out	integer	Positive node of end 2 of t. line
15	neg_node2	Out	integer	Negative node of end 2 of t. line
18	delays	Out	real vector	Delayed values of excitation

30.3.4 TransLine - Simple Lossy Transmission Line

30.3.4.1 TransLine instance parameters

#	Name	Direction	Type	Description
1	pos_node	In	integer	Positive node of txl
2	neg_node	In	integer	Negative node of txl
3	length	InOut	real	length of line

30.3.4.2 TransLine model parameters

#	Name	Direction	Type	Description
101	r	InOut	real	resistance per length
104	l	InOut	real	inductance per length
102	c	InOut	real	capacitance per length
103	g	InOut	real	conductance per length
105	length	InOut	real	length
106	txl	In	flag	Device is a txl model

30.3.5 URC - Uniform R. C. line

30.3.5.1 URC instance parameters

#	Name	Direction	Type	Description
1	l	InOut	real	Length of transmission line
2	n	InOut	real	Number of lumps
3	pos_node	Out	integer	Positive node of URC
4	neg_node	Out	integer	Negative node of URC
5	gnd	Out	integer	Ground node of URC

30.3.5.2 URC model parameters

#	Name	Direction	Type	Description
101	k	InOut	real	Propagation constant
102	fmax	InOut	real	Maximum frequency of interest
103	rperl	InOut	real	Resistance per unit length
104	cperl	InOut	real	Capacitance per unit length
105	isperl	InOut	real	Saturation current per length
106	rsperl	InOut	real	Diode resistance per length
107	urc	In	flag	Uniform R.C. line model

30.4 BJTs

30.4.1 BJT - Bipolar Junction Transistor

30.4.1.1 BJT instance parameters

#	Name	Direction	Type	Description
2	off	InOut	flag	Device initially off
3	icvbe	InOut	real	Initial B-E voltage
4	icvce	InOut	real	Initial C-E voltage
1	area	InOut	real	(Emitter) Area factor
10	areab	InOut	real	Base area factor
11	areac	InOut	real	Collector area factor
9	m	InOut	real	Parallel Multiplier
5	ic	In	real vector	Initial condition vector
6	sens_area	In	flag	flag to request sensitivity WRT area
202	colnode	Out	integer	Number of collector node
203	basenode	Out	integer	Number of base node
204	emitnode	Out	integer	Number of emitter node
205	substnode	Out	integer	Number of substrate node
206	colprimenode	Out	integer	Internal collector node
207	baseprimenode	Out	integer	Internal base node
208	emitprimenode	Out	integer	Internal emitter node
211	ic	Out	real	Current at collector node
212	ib	Out	real	Current at base node
236	ie	Out	real	Emitter current
237	is	Out	real	Substrate current
209	vbe	Out	real	B-E voltage
210	vbc	Out	real	B-C voltage
215	gm	Out	real	Small signal transconductance
213	gpi	Out	real	Small signal input conductance - pi
214	gmu	Out	real	Small signal conductance - mu
225	gx	Out	real	Conductance from base to internal base
216	go	Out	real	Small signal output conductance
227	geqcb	Out	real	d(Ibe)/d(Vbc)
228	gccs	Out	real	Internal C-S cap. equiv. cond.
229	geqbx	Out	real	Internal C-B-base cap. equiv. cond.
239	cpi	Out	real	Internal base to emitter capactance
240	cmu	Out	real	Internal base to collector capactiance
241	cbx	Out	real	Base to collector capacitance
242	ccs	Out	real	Collector to substrate capacitance
218	cqbe	Out	real	Cap. due to charge storage in B-E jct.
220	cqbc	Out	real	Cap. due to charge storage in B-C jct.
222	cqcs	Out	real	Cap. due to charge storage in C-S jct.
224	cqbx	Out	real	Cap. due to charge storage in B-X jct.
226	cexbc	Out	real	Total Capacitance in B-X junction

217	qbe	Out	real	Charge storage B-E junction
219	qbc	Out	real	Charge storage B-C junction
221	qcs	Out	real	Charge storage C-S junction
223	qbx	Out	real	Charge storage B-X junction
238	p	Out	real	Power dissipation
235	sens_dc	Out	real	dc sensitivity
230	sens_real	Out	real	real part of ac sensitivity
231	sens_imag	Out	real	dc sens. & imag part of ac sens.
232	sens_mag	Out	real	sensitivity of ac magnitude
233	sens_ph	Out	real	sensitivity of ac phase
234	sens_cplx	Out	complex	ac sensitivity
7	temp	InOut	real	instance temperature
8	dtemp	InOut	real	instance temperature delta from circuit

30.4.1.2 BJT model parameters

#	Name	Direction	Type	Description
309	type	Out	string	NPN or PNP
101	npn	InOut	flag	NPN type device
102	pnp	InOut	flag	PNP type device
103	is	InOut	real	Saturation Current
104	bf	InOut	real	Ideal forward beta
105	nf	InOut	real	Forward emission coefficient
106	vaf	InOut	real	Forward Early voltage
106	va	InOut	real	
107	ikf	InOut	real	Forward beta roll-off corner current
107	ik	InOut	real	
108	ise	InOut	real	B-E leakage saturation current
110	ne	InOut	real	B-E leakage emission coefficient
111	br	InOut	real	Ideal reverse beta
112	nr	InOut	real	Reverse emission coefficient
113	var	InOut	real	Reverse Early voltage
113	vb	InOut	real	
114	ikr	InOut	real	reverse beta roll-off corner current
115	isc	InOut	real	B-C leakage saturation current
117	nc	InOut	real	B-C leakage emission coefficient
118	rb	InOut	real	Zero bias base resistance
119	irb	InOut	real	Current for base resistance=(rb+rbm)/2
120	rbm	InOut	real	Minimum base resistance
121	re	InOut	real	Emitter resistance
122	rc	InOut	real	Collector resistance
123	cje	InOut	real	Zero bias B-E depletion capacitance
124	vje	InOut	real	B-E built in potential
124	pe	InOut	real	
125	mje	InOut	real	B-E junction grading coefficient
125	me	InOut	real	

126	tf	InOut	real	Ideal forward transit time
127	xtf	InOut	real	Coefficient for bias dependence of TF
128	vtf	InOut	real	Voltage giving VBC dependence of TF
129	itf	InOut	real	High current dependence of TF
130	ptf	InOut	real	Excess phase
131	cjc	InOut	real	Zero bias B-C depletion capacitance
132	vjc	InOut	real	B-C built in potential
132	pc	InOut	real	
133	mjc	InOut	real	B-C junction grading coefficient
133	mc	InOut	real	
134	xcjc	InOut	real	Fraction of B-C cap to internal base
135	tr	InOut	real	Ideal reverse transit time
136	cjs	InOut	real	Zero bias C-S capacitance
136	ccs	InOut	real	Zero bias C-S capacitance
137	vjs	InOut	real	Substrate junction built in potential
137	ps	InOut	real	
138	mjs	InOut	real	Substrate junction grading coefficient
138	ms	InOut	real	
139	xtb	InOut	real	Forward and reverse beta temp. exp.
140	eg	InOut	real	Energy gap for IS temp. dependency
141	xti	InOut	real	Temp. exponent for IS
142	fc	InOut	real	Forward bias junction fit parameter
301	invearlyvoltf	Out	real	Inverse early voltage:forward
302	invearlyvoltr	Out	real	Inverse early voltage:reverse
303	invrollofff	Out	real	Inverse roll off - forward
304	invrolloffr	Out	real	Inverse roll off - reverse
305	collectorconduct	Out	real	Collector conductance
306	emitterconduct	Out	real	Emitter conductance
307	transtimevbcfact	Out	real	Transit time VBC factor
308	excessphasefactor	Out	real	Excess phase fact.
143	tnom	InOut	real	Parameter measurement temperature
145	kf	InOut	real	Flicker Noise Coefficient
144	af	InOut	real	Flicker Noise Exponent

30.4.2 BJT - Bipolar Junction Transistor Level 2

30.4.2.1 BJT2 instance parameters

#	Name	Direction	Type	Description
2	off	InOut	flag	Device initially off
3	icvbe	InOut	real	Initial B-E voltage
4	icvce	InOut	real	Initial C-E voltage
1	area	InOut	real	(Emitter) Area factor
10	areab	InOut	real	Base area factor
11	areac	InOut	real	Collector area factor
9	m	InOut	real	Parallel Multiplier
5	ic	In	real vector	Initial condition vector
6	sens_area	In	flag	flag to request sensitivity WRT area
202	colnode	Out	integer	Number of collector node
203	basenode	Out	integer	Number of base node
204	emitnode	Out	integer	Number of emitter node
205	substnode	Out	integer	Number of substrate node
206	colprimenode	Out	integer	Internal collector node
207	baseprimenode	Out	integer	Internal base node
208	emitprimenode	Out	integer	Internal emitter node
211	ic	Out	real	Current at collector node
212	ib	Out	real	Current at base node
236	ie	Out	real	Emitter current
237	is	Out	real	Substrate current
209	vbe	Out	real	B-E voltage
210	vbc	Out	real	B-C voltage
215	gm	Out	real	Small signal transconductance
213	gpi	Out	real	Small signal input conductance - pi
214	gmu	Out	real	Small signal conductance - mu
225	gx	Out	real	Conductance from base to internal base
216	go	Out	real	Small signal output conductance
227	geqcb	Out	real	d(Ibe)/d(Vbc)
228	gcsub	Out	real	Internal Subs. cap. equiv. cond.
243	gdsub	Out	real	Internal Subs. Diode equiv. cond.
229	geqbx	Out	real	Internal C-B-base cap. equiv. cond.
239	cpi	Out	real	Internal base to emitter capactance
240	cmu	Out	real	Internal base to collector capactiance
241	cbx	Out	real	Base to collector capacitance
242	csub	Out	real	Substrate capacitance
218	cqbe	Out	real	Cap. due to charge storage in B-E jct.
220	cqbc	Out	real	Cap. due to charge storage in B-C jct.
222	cqsub	Out	real	Cap. due to charge storage in Subs. jct.
224	cqbx	Out	real	Cap. due to charge storage in B-X jct.
226	cexbc	Out	real	Total Capacitance in B-X junction
217	qbe	Out	real	Charge storage B-E junction
219	qbc	Out	real	Charge storage B-C junction

221	qsub	Out	real	Charge storage Subs. junction
223	qbx	Out	real	Charge storage B-X junction
238	p	Out	real	Power dissipation
235	sens_dc	Out	real	dc sensitivity
230	sens_real	Out	real	real part of ac sensitivity
231	sens_imag	Out	real	dc sens. & imag part of ac sens.
232	sens_mag	Out	real	sensitivity of ac magnitude
233	sens_ph	Out	real	sensitivity of ac phase
234	sens_cplx	Out	complex	ac sensitivity
7	temp	InOut	real	instance temperature
8	dtemp	InOut	real	instance temperature delta from circuit

30.4.2.2 BJT2 model parameters

#	Name	Direction	Type	Description
309	type	Out	string	NPN or PNP
101	npn	InOut	flag	NPN type device
102	pnp	InOut	flag	PNP type device
147	subs	InOut	integer	Vertical or Lateral device
103	is	InOut	real	Saturation Current
146	iss	InOut	real	Substrate Jct. Saturation Current
104	bf	InOut	real	Ideal forward beta
105	nf	InOut	real	Forward emission coefficient
106	vaf	InOut	real	Forward Early voltage
106	va	InOut	real	
107	ikf	InOut	real	Forward beta roll-off corner current
107	ik	InOut	real	
108	ise	InOut	real	B-E leakage saturation current
110	ne	InOut	real	B-E leakage emission coefficient
111	br	InOut	real	Ideal reverse beta
112	nr	InOut	real	Reverse emission coefficient
113	var	InOut	real	Reverse Early voltage
113	vb	InOut	real	
114	ikr	InOut	real	reverse beta roll-off corner current
115	isc	InOut	real	B-C leakage saturation current
117	nc	InOut	real	B-C leakage emission coefficient
118	rb	InOut	real	Zero bias base resistance
119	irb	InOut	real	Current for base resistance=(rb+rbm)/2
120	rbm	InOut	real	Minimum base resistance
121	re	InOut	real	Emitter resistance
122	rc	InOut	real	Collector resistance
123	cje	InOut	real	Zero bias B-E depletion capacitance
124	vje	InOut	real	B-E built in potential
124	pe	InOut	real	
125	mje	InOut	real	B-E junction grading coefficient
125	me	InOut	real	

126	tf	InOut	real	Ideal forward transit time
127	xtf	InOut	real	Coefficient for bias dependence of TF
128	vtf	InOut	real	Voltage giving VBC dependence of TF
129	itf	InOut	real	High current dependence of TF
130	ptf	InOut	real	Excess phase
131	cjc	InOut	real	Zero bias B-C depletion capacitance
132	vjc	InOut	real	B-C built in potential
132	pc	InOut	real	
133	mjc	InOut	real	B-C junction grading coefficient
133	mc	InOut	real	
134	xcjc	InOut	real	Fraction of B-C cap to internal base
135	tr	InOut	real	Ideal reverse transit time
136	cjs	InOut	real	Zero bias Substrate capacitance
136	csub	InOut	real	
137	vjs	InOut	real	Substrate junction built in potential
137	ps	InOut	real	
138	mjs	InOut	real	Substrate junction grading coefficient
138	ms	InOut	real	
139	xtb	InOut	real	Forward and reverse beta temp. exp.
140	eg	InOut	real	Energy gap for IS temp. dependency
141	xti	InOut	real	Temp. exponent for IS
148	tre1	InOut	real	Temp. coefficient 1 for RE
149	tre2	InOut	real	Temp. coefficient 2 for RE
150	trc1	InOut	real	Temp. coefficient 1 for RC
151	trc2	InOut	real	Temp. coefficient 2 for RC
152	trb1	InOut	real	Temp. coefficient 1 for RB
153	trb2	InOut	real	Temp. coefficient 2 for RB
154	trbm1	InOut	real	Temp. coefficient 1 for RBM
155	trbm2	InOut	real	Temp. coefficient 2 for RBM
142	fc	InOut	real	Forward bias junction fit parameter
301	invearlyvoltf	Out	real	Inverse early voltage:forward
302	invearlyvoltr	Out	real	Inverse early voltage:reverse
303	invrollofff	Out	real	Inverse roll off - forward
304	invrolloffr	Out	real	Inverse roll off - reverse
305	collectorconduct	Out	real	Collector conductance
306	emitterconduct	Out	real	Emitter conductance
307	transtimevbcfact	Out	real	Transit time VBC factor
308	excessphasefactor	Out	real	Excess phase fact.
143	tnom	InOut	real	Parameter measurement temperature
145	kf	InOut	real	Flicker Noise Coefficient
144	af	InOut	real	Flicker Noise Exponent

30.4.3 VBIC - Vertical Bipolar Inter-Company Model

30.4.3.1 VBIC instance parameters

#	Name	Direction	Type	Description
1	area	InOut	real	Area factor
2	off	InOut	flag	Device initially off
3	ic	In	real vector	Initial condition vector
4	icvbe	InOut	real	Initial B-E voltage
5	icvce	InOut	real	Initial C-E voltage
6	temp	InOut	real	Instance temperature
7	dtemp	InOut	real	Instance delta temperature
8	m	InOut	real	Multiplier
212	collnode	Out	integer	Number of collector node
213	basenode	Out	integer	Number of base node
214	emitnode	Out	integer	Number of emitter node
215	subsnode	Out	integer	Number of substrate node
216	collCXnode	Out	integer	Internal collector node
217	collCInode	Out	integer	Internal collector node
218	baseBXnode	Out	integer	Internal base node
219	baseBInode	Out	integer	Internal base node
220	baseBPnode	Out	integer	Internal base node
221	emitEInode	Out	integer	Internal emitter node
222	subsSInode	Out	integer	Internal substrate node
223	vbe	Out	real	B-E voltage
224	vbc	Out	real	B-C voltage
225	ic	Out	real	Collector current
226	ib	Out	real	Base current
227	ie	Out	real	Emitter current
228	is	Out	real	Substrate current
229	gm	Out	real	Small signal transconductance dIc/dVbe
230	go	Out	real	Small signal output conductance dIc/dVbc
231	gpi	Out	real	Small signal input conductance dIb/dVbe
232	gmu	Out	real	Small signal conductance dIb/dVbc
233	gx	Out	real	Conductance from base to internal base
247	cbe	Out	real	Internal base to emitter capacitance
248	cbex	Out	real	External base to emitter capacitance
249	cbc	Out	real	Internal base to collector capacitance
250	cbcx	Out	real	External Base to collector capacitance
251	cbep	Out	real	Parasitic Base to emitter capacitance
252	cbcp	Out	real	Parasitic Base to collector capacitance
259	p	Out	real	Power dissipation
243	geqcb	Out	real	Internal C-B-base cap. equiv. cond.
246	geqbx	Out	real	External C-B-base cap. equiv. cond.
234	qbe	Out	real	Charge storage B-E junction
235	cqbe	Out	real	Cap. due to charge storage in B-E jct.
236	qbc	Out	real	Charge storage B-C junction

237	cqbc	Out	real	Cap. due to charge storage in B-C jct.
238	qbx	Out	real	Charge storage B-X junction
239	cqbx	Out	real	Cap. due to charge storage in B-X jct.
258	sens_dc	Out	real	DC sensitivity
253	sens_real	Out	real	Real part of AC sensitivity
254	sens_imag	Out	real	DC sens. & imag part of AC sens.
255	sens_mag	Out	real	Sensitivity of AC magnitude
256	sens_ph	Out	real	Sensitivity of AC phase
257	sens_cplx	Out	complex	AC sensitivity

30.4.3.2 VBIC model parameters

#	Name	Direction	Type	Description
305	type	Out	string	NPN or PNP
101	npn	InOut	flag	NPN type device
102	pnp	InOut	flag	PNP type device
103	tnom	InOut	real	Parameter measurement temperature
104	rcx	InOut	real	Extrinsic coll resistance
105	rci	InOut	real	Intrinsic coll resistance
106	vo	InOut	real	Epi drift saturation voltage
107	gamm	InOut	real	Epi doping parameter
108	hrcf	InOut	real	High current RC factor
109	rbx	InOut	real	Extrinsic base resistance
110	rbi	InOut	real	Intrinsic base resistance
111	re	InOut	real	Intrinsic emitter resistance
112	rs	InOut	real	Intrinsic substrate resistance
113	rbp	InOut	real	Parasitic base resistance
114	is	InOut	real	Transport saturation current
115	nf	InOut	real	Forward emission coefficient
116	nr	InOut	real	Reverse emission coefficient
117	fc	InOut	real	Fwd bias depletion capacitance limit
118	cbeo	InOut	real	Extrinsic B-E overlap capacitance
119	cje	InOut	real	Zero bias B-E depletion capacitance
120	pe	InOut	real	B-E built in potential
121	me	InOut	real	B-E junction grading coefficient
122	aje	InOut	real	B-E capacitance smoothing factor
123	cbco	InOut	real	Extrinsic B-C overlap capacitance
124	cjc	InOut	real	Zero bias B-C depletion capacitance
125	qco	InOut	real	Epi charge parameter
126	cjep	InOut	real	B-C extrinsic zero bias capacitance
127	pc	InOut	real	B-C built in potential
128	mc	InOut	real	B-C junction grading coefficient
129	ajc	InOut	real	B-C capacitance smoothing factor
130	cjcp	InOut	real	Zero bias S-C capacitance
131	ps	InOut	real	S-C junction built in potential
132	ms	InOut	real	S-C junction grading coefficient

133	ajs	InOut	real	S-C capacitance smoothing factor
134	ibei	InOut	real	Ideal B-E saturation current
135	wbe	InOut	real	Portion of IBEI from Vbei, 1-WBE from Vbex
136	nei	InOut	real	Ideal B-E emission coefficient
137	iben	InOut	real	Non-ideal B-E saturation current
138	nen	InOut	real	Non-ideal B-E emission coefficient
139	ibci	InOut	real	Ideal B-C saturation current
140	nci	InOut	real	Ideal B-C emission coefficient
141	ibcn	InOut	real	Non-ideal B-C saturation current
142	ncn	InOut	real	Non-ideal B-C emission coefficient
143	avc1	InOut	real	B-C weak avalanche parameter 1
144	avc2	InOut	real	B-C weak avalanche parameter 2
145	isp	InOut	real	Parasitic transport saturation current
146	wsp	InOut	real	Portion of ICCP
147	nfp	InOut	real	Parasitic fwd emission coefficient
148	ibeip	InOut	real	Ideal parasitic B-E saturation current
149	ibenp	InOut	real	Non-ideal parasitic B-E saturation current
150	ibcip	InOut	real	Ideal parasitic B-C saturation current
151	ncip	InOut	real	Ideal parasitic B-C emission coefficient
152	ibcnp	InOut	real	Nonideal parasitic B-C saturation current
153	ncnp	InOut	real	Nonideal parasitic B-C emission coefficient
154	vef	InOut	real	Forward Early voltage
155	ver	InOut	real	Reverse Early voltage
156	ikf	InOut	real	Forward knee current
157	ikr	InOut	real	Reverse knee current
158	ikp	InOut	real	Parasitic knee current
159	tf	InOut	real	Ideal forward transit time
160	qtf	InOut	real	Variation of TF with base-width modulation
161	xtf	InOut	real	Coefficient for bias dependence of TF
162	vtf	InOut	real	Voltage giving VBC dependence of TF
163	itf	InOut	real	High current dependence of TF
164	tr	InOut	real	Ideal reverse transit time
165	td	InOut	real	Forward excess-phase delay time
166	kfn	InOut	real	B-E Flicker Noise Coefficient
167	afn	InOut	real	B-E Flicker Noise Exponent
168	bfn	InOut	real	B-E Flicker Noise 1/f dependence
169	xre	InOut	real	Temperature exponent of RE
170	xrb	InOut	real	Temperature exponent of RB
171	xrbi	InOut	real	Temperature exponent of RBI
172	xrc	InOut	real	Temperature exponent of RC
173	xrci	InOut	real	Temperature exponent of RCI
174	xrs	InOut	real	Temperature exponent of RS
175	xvo	InOut	real	Temperature exponent of VO
176	ea	InOut	real	Activation energy for IS
177	eaie	InOut	real	Activation energy for IBEI
179	eaic	InOut	real	Activation energy for IBCI/IBEIP

179	eais	InOut	real	Activation energy for IBCIP
180	eane	InOut	real	Activation energy for IBEN
181	eanc	InOut	real	Activation energy for IBCN/IBENP
182	eans	InOut	real	Activation energy for IBCNP
183	xis	InOut	real	Temperature exponent of IS
184	xii	InOut	real	Temperature exponent of IBEI,IBCI,IBEIP,IBCIP
185	xin	InOut	real	Temperature exponent of IBEN,IBCN,IBENP,IBCNP
186	tnf	InOut	real	Temperature exponent of NF
187	tavc	InOut	real	Temperature exponent of AVC2
188	rth	InOut	real	Thermal resistance
189	cth	InOut	real	Thermal capacitance
190	vrt	InOut	real	Punch-through voltage of internal B-C junction
191	art	InOut	real	Smoothing parameter for reach-through
192	ccso	InOut	real	Fixed C-S capacitance
193	qbm	InOut	real	Select SGP qb formulation
194	nkf	InOut	real	High current beta rolloff
195	xikf	InOut	real	Temperature exponent of IKF
196	xrcx	InOut	real	Temperature exponent of RCX
197	xrbx	InOut	real	Temperature exponent of RBX
198	xrbp	InOut	real	Temperature exponent of RBP
199	isrr	InOut	real	Separate IS for fwd and rev
200	xisr	InOut	real	Temperature exponent of ISR
201	dear	InOut	real	Delta activation energy for ISRR
202	eap	InOut	real	Exitivation energy for ISP
203	vbbe	InOut	real	B-E breakdown voltage
204	nbbe	InOut	real	B-E breakdown emission coefficient
205	ibbe	InOut	real	B-E breakdown current
206	tvbbe1	InOut	real	Linear temperature coefficient of VBBE
207	tvbbe2	InOut	real	Quadratic temperature coefficient of VBBE
208	tnbbe	InOut	real	Temperature coefficient of NBBE
209	ebbe	InOut	real	exp(-VBBE/(NBBE*Vtv))
210	dtemp	InOut	real	Locale Temperature difference
211	vers	InOut	real	Revision Version
212	vref	InOut	real	Reference Version

30.5 MOSFETs

30.5.1 MOS1 - Level 1 MOSFET model with Meyer capacitance model

30.5.1.1 MOS1 instance parameters

#	Name	Direction	Type	Description
21	m	InOut	real	Multiplier
2	l	InOut	real	Length
1	w	InOut	real	Width
4	ad	InOut	real	Drain area
3	as	InOut	real	Source area
6	pd	InOut	real	Drain perimeter
5	ps	InOut	real	Source perimeter
8	nrd	InOut	real	Drain squares
7	nrs	InOut	real	Source squares
9	off	In	flag	Device initially off
12	icvds	InOut	real	Initial D-S voltage
13	icvgs	InOut	real	Initial G-S voltage
11	icvbs	InOut	real	Initial B-S voltage
20	temp	InOut	real	Instance temperature
22	dtemp	InOut	real	Instance temperature difference
10	ic	In	real vector	Vector of D-S, G-S, B-S voltages
15	sens_l	In	flag	flag to request sensitivity WRT length
14	sens_w	In	flag	flag to request sensitivity WRT width
215	id	Out	real	Drain current
18	is	Out	real	Source current
17	ig	Out	real	Gate current
16	ib	Out	real	Bulk current
217	ibd	Out	real	B-D junction current
216	ibs	Out	real	B-S junction current
231	vgs	Out	real	Gate-Source voltage
232	vds	Out	real	Drain-Source voltage
230	vbs	Out	real	Bulk-Source voltage
229	vbd	Out	real	Bulk-Drain voltage
203	dnode	Out	integer	Number of the drain node
204	gnode	Out	integer	Number of the gate node
205	snode	Out	integer	Number of the source node
206	bnode	Out	integer	Number of the node
207	dnodeprime	Out	integer	Number of int. drain node
208	snodeprime	Out	integer	Number of int. source node
211	von	Out	real	
212	vdsat	Out	real	Saturation drain voltage
213	sourcevcrit	Out	real	Critical source voltage
214	drainvcrit	Out	real	Critical drain voltage
#	Name	Direction	Type	Description

#	Name	Direction	Type	Description
258	rs	Out	real	Source resistance
209	sourceconductance	Out	real	Conductance of source
259	rd	Out	real	Drain conductance
210	drainconductance	Out	real	Conductance of drain
219	gm	Out	real	Transconductance
220	gds	Out	real	Drain-Source conductance
218	gmb	Out	real	Bulk-Source transconductance
218	gmbs	Out	real	
221	gbd	Out	real	Bulk-Drain conductance
222	gbs	Out	real	Bulk-Source conductance
223	cbd	Out	real	Bulk-Drain capacitance
224	cbs	Out	real	Bulk-Source capacitance
233	cgs	Out	real	Gate-Source capacitance
236	cgd	Out	real	Gate-Drain capacitance
239	cgb	Out	real	Gate-Bulk capacitance
235	cqgs	Out	real	Capacitance due to gate-source charge storage
238	cqgd	Out	real	Capacitance due to gate-drain charge storage
241	cqgb	Out	real	Capacitance due to gate-bulk charge storage
243	cqbd	Out	real	Capacitance due to bulk-drain charge storage
245	cqbs	Out	real	Capacitance due to bulk-source charge storage
225	cbd0	Out	real	Zero-Bias B-D junction capacitance
226	cbdsw0	Out	real	
227	cbs0	Out	real	Zero-Bias B-S junction capacitance
228	cbssw0	Out	real	
234	qgs	Out	real	Gate-Source charge storage
237	qgd	Out	real	Gate-Drain charge storage
240	qgb	Out	real	Gate-Bulk charge storage
242	qbd	Out	real	Bulk-Drain charge storage
244	qbs	Out	real	Bulk-Source charge storage
19	p	Out	real	Instaneous power
256	sens_l_dc	Out	real	dc sensitivity wrt length
246	sens_l_real	Out	real	real part of ac sensitivity wrt length
247	sens_l_imag	Out	real	imag part of ac sensitivity wrt length
248	sens_l_mag	Out	real	sensitivity wrt l of ac magnitude
249	sens_l_ph	Out	real	sensitivity wrt l of ac phase
250	sens_l_cplx	Out	complex	ac sensitivity wrt length
257	sens_w_dc	Out	real	dc sensitivity wrt width
251	sens_w_real	Out	real	real part of ac sensitivity wrt width
252	sens_w_imag	Out	real	imag part of ac sensitivity wrt width
253	sens_w_mag	Out	real	sensitivity wrt w of ac magnitude
254	sens_w_ph	Out	real	sensitivity wrt w of ac phase
255	sens_w_cplx	Out	complex	ac sensitivity wrt width
#	Name	Direction	Type	Description

30.5.1.2 MOS1 model parameters

#	Name	Direction	Type	Description
133	type	Out	string	N-channel or P-channel MOS
101	vto	InOut	real	Threshold voltage
101	vt0	InOut	real	
102	kp	InOut	real	Transconductance parameter
103	gamma	InOut	real	Bulk threshold parameter
104	phi	InOut	real	Surface potential
105	lambda	InOut	real	Channel length modulation
106	rd	InOut	real	Drain ohmic resistance
107	rs	InOut	real	Source ohmic resistance
108	cbd	InOut	real	B-D junction capacitance
109	cbs	InOut	real	B-S junction capacitance
110	is	InOut	real	Bulk junction sat. current
111	pb	InOut	real	Bulk junction potential
112	cgso	InOut	real	Gate-source overlap cap.
113	cgdo	InOut	real	Gate-drain overlap cap.
114	cgbo	InOut	real	Gate-bulk overlap cap.
122	rsh	InOut	real	Sheet resistance
115	cj	InOut	real	Bottom junction cap per area
116	mj	InOut	real	Bottom grading coefficient
117	cjsw	InOut	real	Side junction cap per area
118	mjsw	InOut	real	Side grading coefficient
119	js	InOut	real	Bulk jct. sat. current density
120	tox	InOut	real	Oxide thickness
121	ld	InOut	real	Lateral diffusion
123	u0	InOut	real	Surface mobility
123	uo	InOut	real	
124	fc	InOut	real	Forward bias jct. fit parm.
128	nmos	In	flag	N type MOSfet model
129	pmos	In	flag	P type MOSfet model
125	nsub	InOut	real	Substrate doping
126	tpg	InOut	integer	Gate type
127	nss	InOut	real	Surface state density
130	tnom	InOut	real	Parameter measurement temperature
131	kf	InOut	real	Flicker noise coefficient
132	af	InOut	real	Flicker noise exponent

30.5.2 MOS2 - Level 2 MOSFET model with Meyer capacitance model

30.5.2.1 MOS 2 instance parameters

#	Name	Direction	Type	Description
80	m	InOut	real	Multiplier
2	l	InOut	real	Length
1	w	InOut	real	Width
4	ad	InOut	real	Drain area
3	as	InOut	real	Source area
6	pd	InOut	real	Drain perimeter
5	ps	InOut	real	Source perimeter
34	id	Out	real	Drain current
34	cd	Out	real	
36	ibd	Out	real	B-D junction current
35	ibs	Out	real	B-S junction current
18	is	Out	real	Source current
17	ig	Out	real	Gate current
16	ib	Out	real	Bulk current
50	vgs	Out	real	Gate-Source voltage
51	vds	Out	real	Drain-Source voltage
49	vbs	Out	real	Bulk-Source voltage
48	vbd	Out	real	Bulk-Drain voltage
8	nrd	InOut	real	Drain squares
7	nrs	InOut	real	Source squares
9	off	In	flag	Device initially off
12	icvds	InOut	real	Initial D-S voltage
13	icvgs	InOut	real	Initial G-S voltage
11	icvbs	InOut	real	Initial B-S voltage
77	temp	InOut	real	Instance operating temperature
81	dtemp	InOut	real	Instance temperature difference
10	ic	In	real vector	Vector of D-S, G-S, B-S voltages
15	sens_l	In	flag	flag to request sensitivity WRT length
14	sens_w	In	flag	flag to request sensitivity WRT width
22	dnode	Out	integer	Number of drain node
23	gnode	Out	integer	Number of gate node
24	snode	Out	integer	Number of source node
25	bnode	Out	integer	Number of bulk node
26	dnodeprime	Out	integer	Number of internal drain node
27	snodeprime	Out	integer	Number of internal source node
30	von	Out	real	
31	vdsat	Out	real	Saturation drain voltage
32	sourcevcrit	Out	real	Critical source voltage
33	drainvcrit	Out	real	Critical drain voltage
78	rs	Out	real	Source resistance

28	sourceconductance	Out	real	Source conductance
79	rd	Out	real	Drain resistance
29	drainconductance	Out	real	Drain conductance
38	gm	Out	real	Transconductance
39	gds	Out	real	Drain-Source conductance
37	gmb	Out	real	Bulk-Source transconductance
37	gmbs	Out	real	
40	gbd	Out	real	Bulk-Drain conductance
41	gbs	Out	real	Bulk-Source conductance
42	cbd	Out	real	Bulk-Drain capacitance
43	cbs	Out	real	Bulk-Source capacitance
52	cgs	Out	real	Gate-Source capacitance
55	cgd	Out	real	Gate-Drain capacitance
58	cgb	Out	real	Gate-Bulk capacitance
44	cbd0	Out	real	Zero-Bias B-D junction capacitance
45	cbdsw0	Out	real	
46	cbs0	Out	real	Zero-Bias B-S junction capacitance
47	cbssw0	Out	real	
54	cqgs	Out	real	Capacitance due to gate-source charge storage
57	cqgd	Out	real	Capacitance due to gate-drain charge storage
60	cqgb	Out	real	Capacitance due to gate-bulk charge storage
62	cqbd	Out	real	Capacitance due to bulk-drain charge storage
64	cqbs	Out	real	Capacitance due to bulk-source charge storage
53	qgs	Out	real	Gate-Source charge storage
56	qgd	Out	real	Gate-Drain charge storage
59	qgb	Out	real	Gate-Bulk charge storage
61	qbd	Out	real	Bulk-Drain charge storage
63	qbs	Out	real	Bulk-Source charge storage
19	p	Out	real	Instantaneous power
75	sens_l_dc	Out	real	dc sensitivity wrt length
70	sens_l_real	Out	real	real part of ac sensitivity wrt length
71	sens_l_imag	Out	real	imag part of ac sensitivity wrt length
74	sens_l_cplx	Out	complex	ac sensitivity wrt length
72	sens_l_mag	Out	real	sensitivity wrt l of ac magnitude
73	sens_l_ph	Out	real	sensitivity wrt l of ac phase
76	sens_w_dc	Out	real	dc sensitivity wrt width
65	sens_w_real	Out	real	dc sensitivity and real part of ac sensitivity wrt width

66	sens_w_imag	Out	real	imag part of ac sensitivity wrt width
67	sens_w_mag	Out	real	sensitivity wrt w of ac magnitude
68	sens_w_ph	Out	real	sensitivity wrt w of ac phase
69	sens_w_cplx	Out	complex	ac sensitivity wrt width

30.5.2.2 MOS2 model parameters

#	Name	Direction	Type	Description
141	type	Out	string	N-channel or P-channel MOS
101	vto	InOut	real	Threshold voltage
101	vt0	InOut	real	
102	kp	InOut	real	Transconductance parameter
103	gamma	InOut	real	Bulk threshold parameter
104	phi	InOut	real	Surface potential
105	lambda	InOut	real	Channel length modulation
106	rd	InOut	real	Drain ohmic resistance
107	rs	InOut	real	Source ohmic resistance
108	cbd	InOut	real	B-D junction capacitance
109	cbs	InOut	real	B-S junction capacitance
110	is	InOut	real	Bulk junction sat. current
111	pb	InOut	real	Bulk junction potential
112	cgso	InOut	real	Gate-source overlap cap.
113	cgdo	InOut	real	Gate-drain overlap cap.
114	cgbo	InOut	real	Gate-bulk overlap cap.
122	rsh	InOut	real	Sheet resistance
115	cj	InOut	real	Bottom junction cap per area
116	mj	InOut	real	Bottom grading coefficient
117	cjsw	InOut	real	Side junction cap per area
118	mjsw	InOut	real	Side grading coefficient
119	js	InOut	real	Bulk jct. sat. current density
120	tox	InOut	real	Oxide thickness
121	ld	InOut	real	Lateral diffusion
123	u0	InOut	real	Surface mobility
123	uo	InOut	real	
124	fc	InOut	real	Forward bias jct. fit parm.
135	nmos	In	flag	N type MOSfet model
136	pmos	In	flag	P type MOSfet model
125	nsub	InOut	real	Substrate doping
126	tpg	InOut	integer	Gate type
127	nss	InOut	real	Surface state density
129	delta	InOut	real	Width effect on threshold
130	uexp	InOut	real	Crit. field exp for mob. deg.
134	ucrit	InOut	real	Crit. field for mob. degradation
131	vmax	InOut	real	Maximum carrier drift velocity
132	xj	InOut	real	Junction depth

133	neff	InOut	real	Total channel charge coeff.
128	nfs	InOut	real	Fast surface state density
137	tnom	InOut	real	Parameter measurement temperature
139	kf	InOut	real	Flicker noise coefficient
140	af	InOut	real	Flicker noise exponent

30.5.3 MOS3 - Level 3 MOSFET model with Meyer capacitance model

30.5.3.1 MOS3 instance parameters

#	Name	Direction	Type	Description
80	m	InOut	real	Multiplier
2	l	InOut	real	Length
1	w	InOut	real	Width
4	ad	InOut	real	Drain area
3	as	InOut	real	Source area
6	pd	InOut	real	Drain perimeter
5	ps	InOut	real	Source perimeter
34	id	Out	real	Drain current
34	cd	Out	real	Drain current
36	ibd	Out	real	B-D junction current
35	ibs	Out	real	B-S junction current
18	is	Out	real	Source current
17	ig	Out	real	Gate current
16	ib	Out	real	Bulk current
50	vgs	Out	real	Gate-Source voltage
51	vds	Out	real	Drain-Source voltage
49	vbs	Out	real	Bulk-Source voltage
48	vbd	Out	real	Bulk-Drain voltage
8	nrd	InOut	real	Drain squares
7	nrs	InOut	real	Source squares
9	off	In	flag	Device initially off
12	icvds	InOut	real	Initial D-S voltage
13	icvgs	InOut	real	Initial G-S voltage
11	icvbs	InOut	real	Initial B-S voltage
10	ic	InOut	real vector	Vector of D-S, G-S, B-S voltages
77	temp	InOut	real	Instance operating temperature
81	dtemp	InOut	real	Instance temperature difference
15	sens_l	In	flag	flag to request sensitivity WRT length
14	sens_w	In	flag	flag to request sensitivity WRT width
22	dnode	Out	integer	Number of drain node
23	gnode	Out	integer	Number of gate node
24	snode	Out	integer	Number of source node
25	bnode	Out	integer	Number of bulk node
26	dnodeprime	Out	integer	Number of internal drain node
27	snodeprime	Out	integer	Number of internal source node
30	von	Out	real	Turn-on voltage
31	vdsat	Out	real	Saturation drain voltage
32	sourcevcrit	Out	real	Critical source voltage
33	drainvcrit	Out	real	Critical drain voltage
78	rs	Out	real	Source resistance
28	sourceconductance	Out	real	Source conductance
79	rd	Out	real	Drain resistance

29	drainconductance	Out	real	Drain conductance
38	gm	Out	real	Transconductance
39	gds	Out	real	Drain-Source conductance
37	gmb	Out	real	Bulk-Source transconductance
37	gmbs	Out	real	Bulk-Source transconductance
40	gbd	Out	real	Bulk-Drain conductance
41	gbs	Out	real	Bulk-Source conductance
42	cbd	Out	real	Bulk-Drain capacitance
43	cbs	Out	real	Bulk-Source capacitance
52	cgs	Out	real	Gate-Source capacitance
55	cgd	Out	real	Gate-Drain capacitance
58	cgb	Out	real	Gate-Bulk capacitance
54	cqgs	Out	real	Capacitance due to gate-source charge storage
57	cqgd	Out	real	Capacitance due to gate-drain charge storage
60	cqgb	Out	real	Capacitance due to gate-bulk charge storage
62	cqbd	Out	real	Capacitance due to bulk-drain charge storage
64	cqbs	Out	real	Capacitance due to bulk-source charge storage
44	cbd0	Out	real	Zero-Bias B-D junction capacitance
45	cbdsw0	Out	real	Zero-Bias B-D sidewall capacitance
46	cbs0	Out	real	Zero-Bias B-S junction capacitance
47	cbssw0	Out	real	Zero-Bias B-S sidewall capacitance
63	qbs	Out	real	Bulk-Source charge storage
53	qgs	Out	real	Gate-Source charge storage
56	qgd	Out	real	Gate-Drain charge storage
59	qgb	Out	real	Gate-Bulk charge storage
61	qbd	Out	real	Bulk-Drain charge storage
19	p	Out	real	Instantaneous power
76	sens_l_dc	Out	real	dc sensitivity wrt length
70	sens_l_real	Out	real	real part of ac sensitivity wrt length
71	sens_l_imag	Out	real	imag part of ac sensitivity wrt length
74	sens_l_cplx	Out	complex	ac sensitivity wrt length
72	sens_l_mag	Out	real	sensitivity wrt l of ac magnitude
73	sens_l_ph	Out	real	sensitivity wrt l of ac phase
75	sens_w_dc	Out	real	dc sensitivity wrt width
65	sens_w_real	Out	real	real part of ac sensitivity wrt width
66	sens_w_imag	Out	real	imag part of ac sensitivity wrt width
67	sens_w_mag	Out	real	sensitivity wrt w of ac magnitude
68	sens_w_ph	Out	real	sensitivity wrt w of ac phase
69	sens_w_cplx	Out	complex	ac sensitivity wrt width

30.5.3.2 MOS3 model parameters

#	Name	Direction	Type	Description
144	type	Out	string	N-channel or P-channel MOS
133	nmos	In	flag	N type MOSfet model
134	pmos	In	flag	P type MOSfet model
101	vto	InOut	real	Threshold voltage
101	vt0	InOut	real	
102	kp	InOut	real	Transconductance parameter
103	gamma	InOut	real	Bulk threshold parameter
104	phi	InOut	real	Surface potential
105	rd	InOut	real	Drain ohmic resistance
106	rs	InOut	real	Source ohmic resistance
107	cbd	InOut	real	B-D junction capacitance
108	cbs	InOut	real	B-S junction capacitance
109	is	InOut	real	Bulk junction sat. current
110	pb	InOut	real	Bulk junction potential
111	cgso	InOut	real	Gate-source overlap cap.
112	cgdo	InOut	real	Gate-drain overlap cap.
113	cgbo	InOut	real	Gate-bulk overlap cap.
114	rsh	InOut	real	Sheet resistance
115	cj	InOut	real	Bottom junction cap per area
116	mj	InOut	real	Bottom grading coefficient
117	cjsw	InOut	real	Side junction cap per area
118	mjsw	InOut	real	Side grading coefficient
119	js	InOut	real	Bulk jct. sat. current density
120	tox	InOut	real	Oxide thickness
121	ld	InOut	real	Lateral diffusion
145	xl	InOut	real	Length mask adjustment
146	wd	InOut	real	Width Narrowing (Diffusion)
147	xw	InOut	real	Width mask adjustment
148	delvto	InOut	real	Threshold voltage Adjust
148	delvt0	InOut	real	
122	u0	InOut	real	Surface mobility
122	uo	InOut	real	
123	fc	InOut	real	Forward bias jct. fit parm.
124	nsub	InOut	real	Substrate doping
125	tpg	InOut	integer	Gate type
126	nss	InOut	real	Surface state density
131	vmax	InOut	real	Maximum carrier drift velocity
135	xj	InOut	real	Junction depth
129	nfs	InOut	real	Fast surface state density
138	xd	InOut	real	Depletion layer width
139	alpha	InOut	real	Alpha
127	eta	InOut	real	Vds dependence of threshold voltage
128	delta	InOut	real	Width effect on threshold
140	input_delta	InOut	real	
130	theta	InOut	real	Vgs dependence on mobility
132	kappa	InOut	real	Kappa
141	tnom	InOut	real	Parameter measurement temperature
142	kf	InOut	real	Flicker noise coefficient
143	af	InOut	real	Flicker noise exponent

30.5.4 MOS6 - Level 6 MOSFET model with Meyer capacitance model

30.5.4.1 MOS6 instance parameters

#	Name	Direction	Type	Description
2	l	InOut	real	Length
1	w	InOut	real	Width
22	m	InOut	real	Parallel Multiplier
4	ad	InOut	real	Drain area
3	as	InOut	real	Source area
6	pd	InOut	real	Drain perimeter
5	ps	InOut	real	Source perimeter
215	id	Out	real	Drain current
215	cd	Out	real	Drain current
18	is	Out	real	Source current
17	ig	Out	real	Gate current
16	ib	Out	real	Bulk current
216	ibs	Out	real	B-S junction capacitance
217	ibd	Out	real	B-D junction capacitance
231	vgs	Out	real	Gate-Source voltage
232	vds	Out	real	Drain-Source voltage
230	vbs	Out	real	Bulk-Source voltage
229	vbd	Out	real	Bulk-Drain voltage
8	nrd	InOut	real	Drain squares
7	nrs	InOut	real	Source squares
9	off	In	flag	Device initially off
12	icvds	InOut	real	Initial D-S voltage
13	icvgs	InOut	real	Initial G-S voltage
11	icvbs	InOut	real	Initial B-S voltage
20	temp	InOut	real	Instance temperature
21	dtemp	InOut	real	Instance temperature difference
10	ic	In	real vector	Vector of D-S, G-S, B-S voltages
15	sens_l	In	flag	flag to request sensitivity WRT length
14	sens_w	In	flag	flag to request sensitivity WRT width
203	dnode	Out	integer	Number of the drain node
204	gnode	Out	integer	Number of the gate node
205	snode	Out	integer	Number of the source node
206	bnode	Out	integer	Number of the node
207	dnodeprime	Out	integer	Number of int. drain node
208	snodeprime	Out	integer	Number of int. source node
258	rs	Out	real	Source resistance
209	sourceconductance	Out	real	Source conductance
259	rd	Out	real	Drain resistance
210	drainconductance	Out	real	Drain conductance
211	von	Out	real	Turn-on voltage
212	vdsat	Out	real	Saturation drain voltage
213	sourcevcrit	Out	real	Critical source voltage

214	drainvcrit	Out	real	Critical drain voltage
218	gmbs	Out	real	Bulk-Source transconductance
219	gm	Out	real	Transconductance
220	gds	Out	real	Drain-Source conductance
221	gbd	Out	real	Bulk-Drain conductance
222	gbs	Out	real	Bulk-Source conductance
233	cgs	Out	real	Gate-Source capacitance
236	cgd	Out	real	Gate-Drain capacitance
239	cgb	Out	real	Gate-Bulk capacitance
223	cbd	Out	real	Bulk-Drain capacitance
224	cbs	Out	real	Bulk-Source capacitance
225	cbd0	Out	real	Zero-Bias B-D junction capacitance
226	cbdsw0	Out	real	
227	cbs0	Out	real	Zero-Bias B-S junction capacitance
228	cbssw0	Out	real	
235	cqgs	Out	real	Capacitance due to gate-source charge storage
238	cqgd	Out	real	Capacitance due to gate-drain charge storage
241	cqgb	Out	real	Capacitance due to gate-bulk charge storage
243	cqbd	Out	real	Capacitance due to bulk-drain charge storage
245	cqbs	Out	real	Capacitance due to bulk-source charge storage
234	qgs	Out	real	Gate-Source charge storage
237	qgd	Out	real	Gate-Drain charge storage
240	qgb	Out	real	Gate-Bulk charge storage
242	qbd	Out	real	Bulk-Drain charge storage
244	qbs	Out	real	Bulk-Source charge storage
19	p	Out	real	Instaneous power
256	sens_l_dc	Out	real	dc sensitivity wrt length
246	sens_l_real	Out	real	real part of ac sensitivity wrt length
247	sens_l_imag	Out	real	imag part of ac sensitivity wrt length
248	sens_l_mag	Out	real	sensitivity wrt l of ac magnitude
249	sens_l_ph	Out	real	sensitivity wrt l of ac phase
250	sens_l_cplx	Out	complex	ac sensitivity wrt length
257	sens_w_dc	Out	real	dc sensitivity wrt width
251	sens_w_real	Out	real	real part of ac sensitivity wrt width
252	sens_w_imag	Out	real	imag part of ac sensitivity wrt width
253	sens_w_mag	Out	real	sensitivity wrt w of ac magnitude
254	sens_w_ph	Out	real	sensitivity wrt w of ac phase
255	sens_w_cplx	Out	complex	ac sensitivity wrt width

30.5.4.2 MOS6 model parameters

#	Name	Direction	Type	Description
140	type	Out	string	N-channel or P-channel MOS
101	vto	InOut	real	Threshold voltage
101	vt0	InOut	real	
102	kv	InOut	real	Saturation voltage factor
103	nv	InOut	real	Saturation voltage coeff.
104	kc	InOut	real	Saturation current factor
105	nc	InOut	real	Saturation current coeff.
106	nvth	InOut	real	Threshold voltage coeff.
107	ps	InOut	real	Sat. current modification par.
108	gamma	InOut	real	Bulk threshold parameter
109	gamma1	InOut	real	Bulk threshold parameter 1
110	sigma	InOut	real	Static feedback effect par.
111	phi	InOut	real	Surface potential
112	lambda	InOut	real	Channel length modulation param.
113	lambda0	InOut	real	Channel length modulation param. 0
114	lambda1	InOut	real	Channel length modulation param. 1
115	rd	InOut	real	Drain ohmic resistance
116	rs	InOut	real	Source ohmic resistance
117	cbd	InOut	real	B-D junction capacitance
118	cbs	InOut	real	B-S junction capacitance
119	is	InOut	real	Bulk junction sat. current
120	pb	InOut	real	Bulk junction potential
121	cgso	InOut	real	Gate-source overlap cap.
122	cgdo	InOut	real	Gate-drain overlap cap.
123	cgbo	InOut	real	Gate-bulk overlap cap.
131	rsh	InOut	real	Sheet resistance
124	cj	InOut	real	Bottom junction cap per area
125	mj	InOut	real	Bottom grading coefficient
126	cjsw	InOut	real	Side junction cap per area
127	mjsw	InOut	real	Side grading coefficient
128	js	InOut	real	Bulk jct. sat. current density
130	ld	InOut	real	Lateral diffusion
129	tox	InOut	real	Oxide thickness
132	u0	InOut	real	Surface mobility
132	uo	InOut	real	
133	fc	InOut	real	Forward bias jct. fit parm.
137	nmos	In	flag	N type MOSfet model
138	pmos	In	flag	P type MOSfet model
135	tpg	InOut	integer	Gate type
134	nsub	InOut	real	Substrate doping
136	nss	InOut	real	Surface state density
139	tnom	InOut	real	Parameter measurement temperature

30.5.5 MOS9 - Modified Level 3 MOSFET model

30.5.5.1 MOS9 instance parameters

#	Name	Direction	Type	Description
80	m	InOut	real	Multiplier
2	l	InOut	real	Length
1	w	InOut	real	Width
4	ad	InOut	real	Drain area
3	as	InOut	real	Source area
6	pd	InOut	real	Drain perimeter
5	ps	InOut	real	Source perimeter
34	id	Out	real	Drain current
34	cd	Out	real	Drain current
36	ibd	Out	real	B-D junction current
35	ibs	Out	real	B-S junction current
18	is	Out	real	Source current
17	ig	Out	real	Gate current
16	ib	Out	real	Bulk current
50	vgs	Out	real	Gate-Source voltage
51	vds	Out	real	Drain-Source voltage
49	vbs	Out	real	Bulk-Source voltage
48	vbd	Out	real	Bulk-Drain voltage
8	nrd	InOut	real	Drain squares
7	nrs	InOut	real	Source squares
9	off	In	flag	Device initially off
12	icvds	InOut	real	Initial D-S voltage
13	icvgs	InOut	real	Initial G-S voltage
11	icvbs	InOut	real	Initial B-S voltage
10	ic	InOut	real vector	Vector of D-S, G-S, B-S voltages
77	temp	InOut	real	Instance operating temperature
81	dtemp	InOut	real	Instance operating temperature difference
15	sens_l	In	flag	flag to request sensitivity WRT length
14	sens_w	In	flag	flag to request sensitivity WRT width
22	dnode	Out	integer	Number of drain node
23	gnode	Out	integer	Number of gate node
24	snode	Out	integer	Number of source node
25	bnode	Out	integer	Number of bulk node
26	dnodeprime	Out	integer	Number of internal drain node
27	snodeprime	Out	integer	Number of internal source node
30	von	Out	real	Turn-on voltage
31	vdsat	Out	real	Saturation drain voltage
32	sourcevcrit	Out	real	Critical source voltage
33	drainvcrit	Out	real	Critical drain voltage
78	rs	Out	real	Source resistance
28	sourceconductance	Out	real	Source conductance
79	rd	Out	real	Drain resistance

29	drainconductance	Out	real	Drain conductance
38	gm	Out	real	Transconductance
39	gds	Out	real	Drain-Source conductance
37	gmb	Out	real	Bulk-Source transconductance
37	gmbs	Out	real	Bulk-Source transconductance
40	gbd	Out	real	Bulk-Drain conductance
41	gbs	Out	real	Bulk-Source conductance
42	cbd	Out	real	Bulk-Drain capacitance
43	cbs	Out	real	Bulk-Source capacitance
52	cgs	Out	real	Gate-Source capacitance
55	cgd	Out	real	Gate-Drain capacitance
58	cgb	Out	real	Gate-Bulk capacitance
54	cqgs	Out	real	Capacitance due to gate-source charge storage
57	cqgd	Out	real	Capacitance due to gate-drain charge storage
60	cqgb	Out	real	Capacitance due to gate-bulk charge storage
62	cqbd	Out	real	Capacitance due to bulk-drain charge storage
64	cqbs	Out	real	Capacitance due to bulk-source charge storage
44	cbd0	Out	real	Zero-Bias B-D junction capacitance
45	cbdsw0	Out	real	Zero-Bias B-D sidewall capacitance
46	cbs0	Out	real	Zero-Bias B-S junction capacitance
47	cbssw0	Out	real	Zero-Bias B-S sidewall capacitance
63	qbs	Out	real	Bulk-Source charge storage
53	qgs	Out	real	Gate-Source charge storage
56	qgd	Out	real	Gate-Drain charge storage
59	qgb	Out	real	Gate-Bulk charge storage
61	qbd	Out	real	Bulk-Drain charge storage
19	p	Out	real	Instantaneous power
76	sens_l_dc	Out	real	dc sensitivity wrt length
70	sens_l_real	Out	real	real part of ac sensitivity wrt length
71	sens_l_imag	Out	real	imag part of ac sensitivity wrt length
74	sens_l_cplx	Out	complex	ac sensitivity wrt length
72	sens_l_mag	Out	real	sensitivity wrt l of ac magnitude
73	sens_l_ph	Out	real	sensitivity wrt l of ac phase
75	sens_w_dc	Out	real	dc sensitivity wrt width
65	sens_w_real	Out	real	real part of ac sensitivity wrt width
66	sens_w_imag	Out	real	imag part of ac sensitivity wrt width
67	sens_w_mag	Out	real	sensitivity wrt w of ac magnitude
68	sens_w_ph	Out	real	sensitivity wrt w of ac phase
69	sens_w_cplx	Out	complex	ac sensitivity wrt width

30.5.5.2 MOS9 model parameters

#	Name	Direction	Type	Description
144	type	Out	string	N-channel or P-channel MOS
133	nmos	In	flag	N type MOSfet model
134	pmos	In	flag	P type MOSfet model
101	vto	InOut	real	Threshold voltage
101	vt0	InOut	real	
102	kp	InOut	real	Transconductance parameter
103	gamma	InOut	real	Bulk threshold parameter
104	phi	InOut	real	Surface potential
105	rd	InOut	real	Drain ohmic resistance
106	rs	InOut	real	Source ohmic resistance
107	cbd	InOut	real	B-D junction capacitance
108	cbs	InOut	real	B-S junction capacitance
109	is	InOut	real	Bulk junction sat. current
110	pb	InOut	real	Bulk junction potential
111	cgso	InOut	real	Gate-source overlap cap.
112	cgdo	InOut	real	Gate-drain overlap cap.
113	cgbo	InOut	real	Gate-bulk overlap cap.
114	rsh	InOut	real	Sheet resistance
115	cj	InOut	real	Bottom junction cap per area
116	mj	InOut	real	Bottom grading coefficient
117	cjsw	InOut	real	Side junction cap per area
118	mjsw	InOut	real	Side grading coefficient
119	js	InOut	real	Bulk jct. sat. current density
120	tox	InOut	real	Oxide thickness
121	ld	InOut	real	Lateral diffusion
145	xl	InOut	real	Length mask adjustment
146	wd	InOut	real	Width Narrowing (Diffusion)
147	xw	InOut	real	Width mask adjustment
148	delvto	InOut	real	Threshold voltage Adjust
148	delvt0	InOut	real	
122	u0	InOut	real	Surface mobility
122	uo	InOut	real	
123	fc	InOut	real	Forward bias jct. fit parm.
124	nsub	InOut	real	Substrate doping
125	tpg	InOut	integer	Gate type
126	nss	InOut	real	Surface state density
131	vmax	InOut	real	Maximum carrier drift velocity
135	xj	InOut	real	Junction depth
129	nfs	InOut	real	Fast surface state density
138	xd	InOut	real	Depletion layer width
139	alpha	InOut	real	Alpha
127	eta	InOut	real	Vds dependence of threshold voltage
128	delta	InOut	real	Width effect on threshold
140	input_delta	InOut	real	
130	theta	InOut	real	Vgs dependence on mobility
132	kappa	InOut	real	Kappa
141	tnom	InOut	real	Parameter measurement temperature
142	kf	InOut	real	Flicker noise coefficient
143	af	InOut	real	Flicker noise exponent

30.5.6 BSIM1 - Berkeley Short Channel IGFET Model

30.5.6.1 BSIM1 instance parameters

#	Name	Direction	Type	Description
2	l	InOut	real	Length
1	w	InOut	real	Width
14	m	InOut	real	Parallel Multiplier
4	ad	InOut	real	Drain area
3	as	InOut	real	Source area
6	pd	InOut	real	Drain perimeter
5	ps	InOut	real	Source perimeter
8	nrd	InOut	real	Number of squares in drain
7	nrs	InOut	real	Number of squares in source
9	off	InOut	flag	Device is initially off
11	vds	InOut	real	Initial D-S voltage
12	vgs	InOut	real	Initial G-S voltage
10	vbs	InOut	real	Initial B-S voltage
13	ic	In	unknown vector	Vector of DS,GS,BS initial voltages

30.5.6.2 BSIM1 Model Parameters

#	Name	Direction	Type	Description
101	vfb	InOut	real	Flat band voltage
102	lvfb	InOut	real	Length dependence of vfb
103	wvfb	InOut	real	Width dependence of vfb
104	phi	InOut	real	Strong inversion surface potential
105	lphi	InOut	real	Length dependence of phi
106	wphi	InOut	real	Width dependence of phi
107	k1	InOut	real	Bulk effect coefficient 1
108	lk1	InOut	real	Length dependence of k1
109	wk1	InOut	real	Width dependence of k1
110	k2	InOut	real	Bulk effect coefficient 2
111	lk2	InOut	real	Length dependence of k2
112	wk2	InOut	real	Width dependence of k2
113	eta	InOut	real	VDS dependence of threshold voltage
114	leta	InOut	real	Length dependence of eta
115	weta	InOut	real	Width dependence of eta
116	x2e	InOut	real	VBS dependence of eta
117	lx2e	InOut	real	Length dependence of x2e
118	wx2e	InOut	real	Width dependence of x2e
119	x3e	InOut	real	VDS dependence of eta
120	lx3e	InOut	real	Length dependence of x3e
121	wx3e	InOut	real	Width dependence of x3e
122	dl	InOut	real	Channel length reduction in um
123	dw	InOut	real	Channel width reduction in um

124	muz	InOut	real	Zero field mobility at VDS=0 VGS=VTH
125	x2mz	InOut	real	VBS dependence of muz
126	lx2mz	InOut	real	Length dependence of x2mz
127	wx2mz	InOut	real	Width dependence of x2mz
128	mus	InOut	real	Mobility at VDS=VDD VGS=VTH, channel length modulation
129	lmus	InOut	real	Length dependence of mus
130	wmus	InOut	real	Width dependence of mus
131	x2ms	InOut	real	VBS dependence of mus
132	lx2ms	InOut	real	Length dependence of x2ms
133	wx2ms	InOut	real	Width dependence of x2ms
134	x3ms	InOut	real	VDS dependence of mus
135	lx3ms	InOut	real	Length dependence of x3ms
136	wx3ms	InOut	real	Width dependence of x3ms
137	u0	InOut	real	VGS dependence of mobility
138	lu0	InOut	real	Length dependence of u0
139	wu0	InOut	real	Width dependence of u0
140	x2u0	InOut	real	VBS dependence of u0
141	lx2u0	InOut	real	Length dependence of x2u0
142	wx2u0	InOut	real	Width dependence of x2u0
143	u1	InOut	real	VDS depence of mobility, velocity saturation
144	lu1	InOut	real	Length dependence of u1
145	wu1	InOut	real	Width dependence of u1
146	x2u1	InOut	real	VBS depence of u1
147	lx2u1	InOut	real	Length depence of x2u1
148	wx2u1	InOut	real	Width depence of x2u1
149	x3u1	InOut	real	VDS depence of u1
150	lx3u1	InOut	real	Length dependence of x3u1
151	wx3u1	InOut	real	Width depence of x3u1
152	n0	InOut	real	Subthreshold slope
153	ln0	InOut	real	Length dependence of n0
154	wn0	InOut	real	Width dependence of n0
155	nb	InOut	real	VBS dependence of subthreshold slope
156	lnb	InOut	real	Length dependence of nb
157	wnb	InOut	real	Width dependence of nb
158	nd	InOut	real	VDS dependence of subthreshold slope
159	lnd	InOut	real	Length dependence of nd
160	wnd	InOut	real	Width dependence of nd
161	tox	InOut	real	Gate oxide thickness in um
162	temp	InOut	real	Temperature in degree Celcius
163	vdd	InOut	real	Supply voltage to specify mus
164	cgso	InOut	real	Gate source overlap capacitance per unit channel width(m)
165	cgdo	InOut	real	Gate drain overlap capacitance per unit channel width(m)
166	cgbo	InOut	real	Gate bulk overlap capacitance per unit channel length(m)
167	xpart	InOut	real	Flag for channel charge partitioning
168	rsh	InOut	real	Source drain diffusion sheet resistance in ohm per square
169	js	InOut	real	Source drain junction saturation current per unit area

170	pb	InOut	real	Source drain junction built in potential
171	mj	InOut	real	Source drain bottom junction capacitance grading coefficient
172	pbsw	InOut	real	Source drain side junction capacitance built in potential
173	mjsw	InOut	real	Source drain side junction capacitance grading coefficient
174	cj	InOut	real	Source drain bottom junction capacitance per unit area
175	cjsw	InOut	real	Source drain side junction capacitance per unit area
176	wdf	InOut	real	Default width of source drain diffusion in um
177	dell	InOut	real	Length reduction of source drain diffusion
180	kf	InOut	real	Flicker noise coefficient
181	af	InOut	real	Flicker noise exponent
178	nmos	In	flag	Flag to indicate NMOS
179	pmos	In	flag	Flag to indicate PMOS

30.5.7 BSIM2 - Berkeley Short Channel IGFET Model

30.5.7.1 BSIM2 instance parameters

#	Name	Direction	Type	Description
2	l	InOut	real	Length
1	w	InOut	real	Width
14	m	InOut	real	Parallel Multiplier
4	ad	InOut	real	Drain area
3	as	InOut	real	Source area
6	pd	InOut	real	Drain perimeter
5	ps	InOut	real	Source perimeter
8	nrd	InOut	real	Number of squares in drain
7	nrs	InOut	real	Number of squares in source
9	off	InOut	flag	Device is initially off
11	vds	InOut	real	Initial D-S voltage
12	vgs	InOut	real	Initial G-S voltage
10	vbs	InOut	real	Initial B-S voltage
13	ic	In	unknown vector	Vector of DS,GS,BS initial voltages

30.5.7.2 BSIM2 model parameters

#	Name	Direction	Type	Description
101	vfb	InOut	real	Flat band voltage
102	lvfb	InOut	real	Length dependence of vfb
103	wvfb	InOut	real	Width dependence of vfb
104	phi	InOut	real	Strong inversion surface potential
105	lphi	InOut	real	Length dependence of phi
106	wphi	InOut	real	Width dependence of phi
107	k1	InOut	real	Bulk effect coefficient 1
108	lk1	InOut	real	Length dependence of k1
109	wk1	InOut	real	Width dependence of k1
110	k2	InOut	real	Bulk effect coefficient 2
111	lk2	InOut	real	Length dependence of k2
112	wk2	InOut	real	Width dependence of k2
113	eta0	InOut	real	VDS dependence of threshold voltage at VDD=0
114	leta0	InOut	real	Length dependence of eta0
115	weta0	InOut	real	Width dependence of eta0
116	etab	InOut	real	VBS dependence of eta
117	letab	InOut	real	Length dependence of etab
118	wetab	InOut	real	Width dependence of etab
119	dl	InOut	real	Channel length reduction in um
120	dw	InOut	real	Channel width reduction in um
121	mu0	InOut	real	Low-field mobility, at VDS=0 VGS=VTH
122	mu0b	InOut	real	VBS dependence of low-field mobility
123	lmu0b	InOut	real	Length dependence of mu0b

124	wmu0b	InOut	real	Width dependence of mu0b
125	mus0	InOut	real	Mobility at VDS=VDD VGS=VTH
126	lmus0	InOut	real	Length dependence of mus0
127	wmus0	InOut	real	Width dependence of mus
128	musb	InOut	real	VBS dependence of mus
129	lmusb	InOut	real	Length dependence of musb
130	wmusb	InOut	real	Width dependence of musb
131	mu20	InOut	real	VDS dependence of mu in tanh term
132	lmu20	InOut	real	Length dependence of mu20
133	wmu20	InOut	real	Width dependence of mu20
134	mu2b	InOut	real	VBS dependence of mu2
135	lmu2b	InOut	real	Length dependence of mu2b
136	wmu2b	InOut	real	Width dependence of mu2b
137	mu2g	InOut	real	VGS dependence of mu2
138	lmu2g	InOut	real	Length dependence of mu2g
139	wmu2g	InOut	real	Width dependence of mu2g
140	mu30	InOut	real	VDS dependence of mu in linear term
141	lmu30	InOut	real	Length dependence of mu30
142	wmu30	InOut	real	Width dependence of mu30
143	mu3b	InOut	real	VBS dependence of mu3
144	lmu3b	InOut	real	Length dependence of mu3b
145	wmu3b	InOut	real	Width dependence of mu3b
146	mu3g	InOut	real	VGS dependence of mu3
147	lmu3g	InOut	real	Length dependence of mu3g
148	wmu3g	InOut	real	Width dependence of mu3g
149	mu40	InOut	real	VDS dependence of mu in linear term
150	lmu40	InOut	real	Length dependence of mu40
151	wmu40	InOut	real	Width dependence of mu40
152	mu4b	InOut	real	VBS dependence of mu4
153	lmu4b	InOut	real	Length dependence of mu4b
154	wmu4b	InOut	real	Width dependence of mu4b
155	mu4g	InOut	real	VGS dependence of mu4
156	lmu4g	InOut	real	Length dependence of mu4g
157	wmu4g	InOut	real	Width dependence of mu4g
158	ua0	InOut	real	Linear VGS dependence of mobility
159	lua0	InOut	real	Length dependence of ua0
160	wua0	InOut	real	Width dependence of ua0
161	uab	InOut	real	VBS dependence of ua
162	luab	InOut	real	Length dependence of uab
163	wuab	InOut	real	Width dependence of uab
164	ub0	InOut	real	Quadratic VGS dependence of mobility
165	lub0	InOut	real	Length dependence of ub0
166	wub0	InOut	real	Width dependence of ub0
167	ubb	InOut	real	VBS dependence of ub
168	lubb	InOut	real	Length dependence of ubb
169	wubb	InOut	real	Width dependence of ubb

170	u10	InOut	real	VDS depence of mobility
171	lu10	InOut	real	Length dependence of u10
172	wu10	InOut	real	Width dependence of u10
173	u1b	InOut	real	VBS depence of u1
174	lu1b	InOut	real	Length depence of u1b
175	wu1b	InOut	real	Width depence of u1b
176	u1d	InOut	real	VDS depence of u1
177	lu1d	InOut	real	Length depence of u1d
178	wu1d	InOut	real	Width depence of u1d
179	n0	InOut	real	Subthreshold slope at VDS=0 VBS=0
180	ln0	InOut	real	Length dependence of n0
181	wn0	InOut	real	Width dependence of n0
182	nb	InOut	real	VBS dependence of n
183	lnb	InOut	real	Length dependence of nb
184	wnb	InOut	real	Width dependence of nb
185	nd	InOut	real	VDS dependence of n
186	lnd	InOut	real	Length dependence of nd
187	wnd	InOut	real	Width dependence of nd
188	vof0	InOut	real	Threshold voltage offset AT VDS=0 VBS=0
189	lvof0	InOut	real	Length dependence of vof0
190	wvof0	InOut	real	Width dependence of vof0
191	vofb	InOut	real	VBS dependence of vof
192	lvofb	InOut	real	Length dependence of vofb
193	wvofb	InOut	real	Width dependence of vofb
194	vofd	InOut	real	VDS dependence of vof
195	lvofd	InOut	real	Length dependence of vofd
196	wvofd	InOut	real	Width dependence of vofd
197	ai0	InOut	real	Pre-factor of hot-electron effect.
198	lai0	InOut	real	Length dependence of ai0
199	wai0	InOut	real	Width dependence of ai0
200	aib	InOut	real	VBS dependence of ai
201	laib	InOut	real	Length dependence of aib
202	waib	InOut	real	Width dependence of aib
203	bi0	InOut	real	Exponential factor of hot-electron effect.
204	lbi0	InOut	real	Length dependence of bi0
205	wbi0	InOut	real	Width dependence of bi0
206	bib	InOut	real	VBS dependence of bi
207	lbib	InOut	real	Length dependence of bib
208	wbib	InOut	real	Width dependence of bib
209	vghigh	InOut	real	Upper bound of the cubic spline function.
210	lvghigh	InOut	real	Length dependence of vghigh
211	wvghigh	InOut	real	Width dependence of vghigh
212	vglow	InOut	real	Lower bound of the cubic spline function.
213	lvglow	InOut	real	Length dependence of vglow
214	wvglow	InOut	real	Width dependence of vglow
215	tox	InOut	real	Gate oxide thickness in um

216	temp	InOut	real	Temperature in degree Celcius
217	vdd	InOut	real	Maximum Vds
218	vgg	InOut	real	Maximum Vgs
219	vbb	InOut	real	Maximum Vbs
220	cgso	InOut	real	Gate source overlap capacitance per unit channel width(m)
221	cgdo	InOut	real	Gate drain overlap capacitance per unit channel width(m)
222	cgbo	InOut	real	Gate bulk overlap capacitance per unit channel length(m)
223	xpart	InOut	real	Flag for channel charge partitioning
224	rsh	InOut	real	Source drain diffusion sheet resistance in ohm per square
225	js	InOut	real	Source drain junction saturation current per unit area
226	pb	InOut	real	Source drain junction built in potential
227	mj	InOut	real	Source drain bottom junction capacitance grading coefficient
228	pbsw	InOut	real	Source drain side junction capacitance built in potential
229	mjsw	InOut	real	Source drain side junction capacitance grading coefficient
230	cj	InOut	real	Source drain bottom junction capacitance per unit area
231	cjsw	InOut	real	Source drain side junction capacitance per unit area
232	wdf	InOut	real	Default width of source drain diffusion in um
233	dell	InOut	real	Length reduction of source drain diffusion
236	kf	InOut	real	Flicker noise coefficient
237	af	InOut	real	Flicker noise exponent
234	nmos	In	flag	Flag to indicate NMOS
235	pmos	In	flag	Flag to indicate PMOS

30.5.8 BSIM3

Detailed descriptions will not be given here. Please refer to the excellent pdf manual issued by University of California at Berkeley.

30.5.9 BSIM4

Detailed descriptions will not be given here. Please refer to the excellent pdf manual issued by University of California at Berkeley.

Chapter 31

Compilation notes

This file describes the procedures to install ngspice from sources.

31.1 Ngspice Installation under LINUX (and other 'UNIXes')

31.1.1 Prerequisites

Ngspice is written in C and thus a complete C compilation environment is needed. Almost any UNIX comes with a complete C development environment. Ngspice is developed on GNU/Linux with gcc and GNU make.

The following software must be installed in your system to compile ngspice: **bison**, **flex,** and **X11** headers and libs.

The X11 headers and libraries are typically available in an X11 development package from your LINUX distribution.

If you want to compile the CVS source you need additional software: **autoconf, automake, libtool, texinfo**.

The following software may be needed when enabling additional features: **editline, tcl/tk, blt.**

31.1.2 Install from CVS

This section describes how to install from source code taken direct from CVS. This will give you access to the most recent enhancements and corrections. However be careful as the code in CVS may be unstable. For user install instructions using source from released distributions, please see the sections titled 'Basic Install' and 'Advanced Install'.

Download source from CVS as described on the sourceforge ngspice CVS page. Define and enter a directory of your choice, e.g. `/home/myname/software/`. Download the source code from CVS, for example by anonymous access by issuing the command

```
cvs -z3 -d:pserver:anonymous@ngspice.cvs.sourceforge.net:/cvsroot/ngspice
    co -P ngspice/ng-spice-rework
```

You will find the sources in directory `/home/myname/software/ngspice/ng-spice-rework`. Now enter the ngspice top level directory `ng-spice-rework` (where the file INSTALL can be found).

The project uses the GNU build process. You should be able to do the following:

```
$ ./autogen.sh
```

```
$ ./configure --with-x --enable-xspice --enable-cider
--disable-debug --with-readline=yes
```

```
$ make
```

```
$ sudo make install
```

See the section titled 'Advanced Install' for instructions about arguments that can be passed to `./configure` to customize the build and installation. The following arguments are already used here and may be called sort of "standard":

`--enable-xspice` Include the XSPICE extensions (see chapters 12 and 27)

`--enable-cider` Include CIDER numerical device simulator (see chapter 29)

`--disable-debug` No debugging information included (optimized and compact code)

`--with-readline=yes` Include an editor for the input command line (command history, backspace, insert etc.). If readline is not available, editline may be used.

If a problem is found with the build process, please submit a report to the Ngspice development team. Please provide information about your system and any `./configure` arguments you are using, together with any error messages. Ideally you would have tried to fix the problem yourself first. If you have fixed the problem then the development team will love to hear from you.

31.1.3 Install from a tarball, e.g. ngspice-rework-24.tgz

This covers installation from a tarball (for example ngspice-rework-24.tgz, to be found at http://sourceforge.net/projects/ngspice/files/). After downloading the tar ball to a local directory unpack it using:

```
$ tar -zxvf ngspice-rework-24.tgz
```

Now change directories in to the top-level source directory (where this text from the INSTALL file can be found).

You should be able to do:

```
$ ./configure --with-x --enable-xspice --disable-debug --with-readline=yes
```

```
$ make
```

```
$ sudo make install
```

The default install dir is /usr/local/bin

See the section titled 'Advanced Install' for instructions about arguments that can be passed to `./configure` to customize the build and installation.

31.1.4 Advanced Install

Some extra options can be provided to './configure'. To get all available options do:

```
$ ./configure --help
```

Some of these options are generic to the GNU build process that is used by Ngspice, other are specific to Ngspice.

The following sections provide some guidance and descriptions for many, but not all, of these options.

31.1.4.1 Options Specific to Using Ngspice

`--enable-adms` ADMS is an experimental model compiler that translates Verilog-A compact models into C code that can be compiled into ngspice. This is still experimental, but working with some limitations to the models (e.g. no noise models). If you want to use it, please refer to the ADMS section on ngspice web site .

`--enable-cider` Cider is a mixed-level simulator that couples Spice3 and DSIM to simulate devices from their technological parameters. This part of the simulator is not compiled by default.

`--enable-ndev` Enable NDEV interface, (experimental) A TCP/IP interface to external device simulator such as GSS. For more information, please visit the homepage of GSS at http://gss-tcad.sourceforge.net

`--enable-newpred` Enable the NEWPRED symbol in the code.

`--enable-xspice` Enable XSpice enhancements, (experimental) A mixed signal simulator built upon spice3 with codemodel dynamic loading support. See chapter 12 and section II for details.

`--with-editline=yes` Enables the use of the BSD editline library (libedit).
See http://www.thrysoee.dk/editline/.

`--with-readline=yes` Enable GNU readline support for the command line interface.

`--with-tcl=tcldir` When configured with this option the tcl module "tclspice" is compiled and installed instead of plain ngspice.

`--enable-openmp` Compile ngspice for multi-core processors. Paralleling is done by OpenMP (see chapt. 16.10).

The following options are seldom used today, not tested, some may even no longer be implemented.

`--enable-capbypass` Bypass calculation of cbd/cbs in the mosfets if the vbs/vbd voltages are unchanged.

`--enable-capzerobypass` Bypass all the cbd/cbs calculations if Czero is zero. This is enabled by default since rework-18.

`--enable-cluster` Clustering code for distributed simulation. This is a contribution never tested. This code comes from TCLspice implementation and is implemented for transient analysis only.

`--enable-expdevices` Enable experimental devices. This option is used by developers to mask devices under development. Almost useless for users.

`--enable-experimental` This enables some experimental code. Specifically it enables: * support for altering options in interactive mode by adding the interactive keyword 'options'. * The ability to save and load snapshots: adds interactive keywords 'savesnap' and 'loadsnap'.

`--enable-help` Force building nghelp. This is deprecated.

`--enable-newtrunc` Enable the newtrunc option

`--enable-nodelimiting` Experimental damping scheme

`--enable-nobypass` Don't bypass recalculations of slowly changing variables

`--enable-nosqrt` Use always log/exp for non-linear capacitances –enable-predictor Enable a predictor method for convergence

`--enable-sense2` Use spice2 sensitivity analysis

`--enable-xgraph` Compile the Xgraph plotting program. Xgraph is a plotting package for X11 and was once very popular.

31.1.4.2 Options Useful for Debugging Ngspice

`--disable-debug` This option will remove the '-g' option passed to the compiler. This speeds up execution time (and compilation) a *lot*, and is recommended for normal use.

The following options are seldom used today, not tested, some may even no longer be implemented.

`--enable-ansi` Configure will try to find an option for your compiler so that it expects ansi-C.

`--enable-asdebug` Debug sensitivity code *ASDEBUG*.

`--enable-blktmsdebug` Debug distortion code *BLOCKTIMES*

`--enable-checkergcc` Option for compilation with checkergcc.

`--enable-cpdebug` Enable ngspice shell code debug.

`--enable-ftedebug` Enable ngspice frontend debug.

`--enable-gc` Enable the Boehm-Weiser Conservative Garbage Collector.

`--enable-pzdebug` Debug pole/zero code.

`--enable-sensdebug` Debug sensitivity code *SENSDEBUG*.

`--enable-smltmsdebug` Debug distortion code *SMALLTIMES*

`--enable-smoketest` Enable smoketest compile.

`--enable-stepdebug` Turns on debugging of convergence steps in transient analysis

31.1.5 Compilation using an user defined directory tree for object files

The procedures described above will store the *.o files (output of the compilation step) into the directories where the sources (*.c) are located. This may not be the best option if you want for example to maintain a debug version and in parallel a release version of ngspice

(`./configure --disable-debug`). So if you intend to create a separate object file tree like ng-spice-rework/ngbuild/release, you may do the following, starting from the default directory ng-spice-rework:

```
mkdir -p release

cd release

../configure <some options>

make install
```

This will create an object file directory tree, similar to the source file directory tree, the object files are now separated from the source files. For the debug version, you may do the same as described above, replacing 'release' by 'debug', and obtain another separated object file directory tree. If you already have run `./configure` in ng-spice-rework, you have to do a maintainer-clean, before the above procedure will work.

31.1.6 Compilers and Options

Some systems require unusual options for compilation or linking that the 'configure' script does not know about. You can give 'configure' initial values for variables by setting them in the environment. Using a Bourne-compatible shell, you can do that on the command line like this:

```
CC=c89

CFLAGS=-O2

LIBS=-lposix

./configure
```

Or on systems that have the 'env' program, you can do it like this:

```
env CPPFLAGS=-I/usr/local/include

LDFLAGS=-s

./configure
```

31.1.7 Compiling For Multiple Architectures

You can compile the package for more than one kind of computer at the same time, by placing the object files for each architecture in their own directory. To do this, you must use a version of 'make' that supports the 'VPATH' variable, such as GNU 'make'. 'cd' to the directory where you want the object files and executables to go and run the 'configure' script. 'configure' automatically checks for the source code in the directory that 'configure' is in and in '..'.

If you have to use a 'make' that does not supports the 'VPATH' variable, you have to compile the package for one architecture at a time in the source code directory. After you have installed the package for one architecture, use 'make distclean' before reconfiguring for another architecture.

31.1.8 Installation Names

By default, 'make install' will install the package's files in '/usr/local/bin', '/usr/local/man', etc. You can specify an installation prefix other than '/usr/local' by giving 'configure' the option '–prefix=PATH'.

You can specify separate installation prefixes for architecture-specific files and architecture-independent files. If you give 'configure' the option '–exec-prefix=PATH', the package will use PATH as the prefix for installing programs and libraries. Documentation and other data files will still use the regular prefix.

In addition, if you use an unusual directory layout you can give options like '–bindir=PATH' to specify different values for particular kinds of files. Run 'configure –help' for a list of the directories you can set and what kinds of files go in them.

If the package supports it, you can cause programs to be installed with an extra prefix or suffix on their names by giving 'configure' the option '–program-prefix=PREFIX' or '–program-suffix=SUFFIX'.

When installed on MinGW with MSYS alternative paths are not fully supported. See 'How to make ngspice with MINGW and MSYS' below for details.

31.1.9 Optional Features

Some packages pay attention to '–enable-FEATURE' options to 'configure', where FEATURE indicates an optional part of the package. They may also pay attention to '–with-PACKAGE' options, where PACKAGE is something like 'gnu-as' or 'x' (for the X Window System). The 'README' should mention any '–enable-' and '–with-' options that the package recognizes.

For packages that use the X Window System, 'configure' can usually find the X include and library files automatically, but if it doesn't, you can use the 'configure' options '–x-includes=DIR' and '–x-libraries=DIR' to specify their locations.

31.1.10 Specifying the System Type

There may be some features 'configure' can not figure out automatically, but needs to determine by the type of host the package will run on. Usually 'configure' can figure that out, but if it prints a message saying it can not guess the host type, give it the '–host=TYPE' option. TYPE can either be a short name for the system type, such as 'sun4', or a canonical name with three fields: CPU-COMPANY-SYSTEM

See the file 'config.sub' for the possible values of each field. If 'config.sub' isn't included in this package, then this package doesn't need to know the host type.

If you are building compiler tools for cross-compiling, you can also use the '–target=TYPE' option to select the type of system they will produce code for and the '–build=TYPE' option to select the type of system on which you are compiling the package.

31.1.11 Sharing Defaults

If you want to set default values for 'configure' scripts to share, you can create a site shell script called 'config.site' that gives default values for variables like 'CC', 'cache_file', and 'prefix'.

'configure' looks for 'PREFIX/share/config.site' if it exists, then 'PREFIX/etc/config.site' if it exists. Or, you can set the 'CONFIG_SITE' environment variable to the location of the site script. A warning: not all 'configure' scripts look for a site script.

31.1.12 Operation Controls

'configure' recognizes the following options to control how it operates.

'--cache-file=FILE' Use and save the results of the tests in FILE instead of './config.cache'. Set FILE to '/dev/null' to disable caching, for debugging 'configure'.

'--help' Print a summary of the options to 'configure', and exit.

'--quiet' '--silent' '-q' Do not print messages saying which checks are being made. To suppress all normal output, redirect it to '/dev/null' (any error messages will still be shown).

'--srcdir=DIR' Look for the package's source code in directory DIR. Usually 'configure' can determine that directory automatically.

'--version' Print the version of Autoconf used to generate the 'configure' script, and exit.

'configure' also accepts some other, not widely useful, options.

31.2 NGSPICE COMPILATION UNDER WINDOWS OS

31.2.1 How to make ngspice with MINGW and MSYS

Creating ngspice with MINGW is now a straight forward procedure, if you have MSYS/MINGW installed properly. Unfortunately the installation is rather tedious because you will need several enhancements to the standard install, especially if you want to include XSpice. Some links are given below which describe the procedures. The default installation location of ngspice is the Windows path C:\spice. The install path can be altered by passing `--prefix=NEWPATH` as an argument to `./configure` during the build process.

Put the install path you desire inside "", e.g. `"D:/NewSpice"`. Be careful to use forward slashes "/", not backward slashes "\" (something still to be fixed). Then add `--prefix="D:/NewSpice"` as an argument to `./configure` in the normal way.

The procedure of compiling a distribution (for example, a the most recent stable distribution from the ngspice website, e.g. ngspice-24.tar.gz), is as follows:

```
$ cd ng-spice-rework
$ cd release
$ ../configure --with-windows ...and other options
$ make
$ make install
```

The useful options are:

`--enable-xspice` (this requires FLEX and BISON available in MSYS, see below).

`--enable-cider`

`--disable-debug` (-O2 optimization, no debug information)

A complete ngspice (release version, no debug info, optimized executable) may be made available just by

```
$ cd ng-spice-rework
$ ./compile_min.sh
```

If you want to compile the CVS source you need additional software packages **cvs, autoconf, automake, libtool,** available from the MSYS distribution**.**

Define and enter a directory of your choice, e.g. /d/spice/. Download the source code from CVS, for example by anonymous access by issuing the command

```
cvs -z3 -d:pserver:anonymous@ngspice.cvs.sourceforge.net:/cvsroot/ngspice co -P r
```

You will find the sources in directory `/d/spice/ngspice/ng-spice-rework`. Now enter the ngspice top level directory `ng-spice-rework`. To compile the code just obtained from the CVS repository the procedure is a little bit different:

```
$ cd ng-spice-rework
$ ./autogen.sh
$ mkdir release
$ cd release
$ ../configure --with-windows ...and other options
$ make
$ make install
```

The user defined build tree saves the object files, instead of putting them into the source tree, in a release (and a debug) tree. Please see chapt. 31.1.5 for instructions.

If you need updating your local source code tree from CVS, just enter `ng-spice-rework` and issue the command

```
cvs -z3 -q -d:pserver:anonymous@ngspice.cvs.sourceforge.net:/cvsroot/ngspice -lf
```

MINGW and MSYS can be downloaded from http://www.mingw.org/. The making of the code models *.cm for XSpice and one of the ngspice parsers require the installation of BISON and FLEX to MSYS. A typical installation was tested with: bison-2.0-MSYS.tar.gz flex-2.5.4a-1-bin.zip libiconv-1.9.2-1-bin.zip libintl-0.14.4-bin.zip

Bison 2.0 is now superseded by newer releases
(Bison 2.3, see http://sourceforge.net/project/showfiles.php?group_id=2435&package_id=67879)

The last three are from http://sourceforge.net/project/showfiles.php?group_id=23617.

You may also look at

http://www.mingw.org/wiki/HOWTO_Install_the_MinGW_GCC_Compiler_Suite

http://www.mingw.org/wiki/MSYS

http://www.mingw.org/wiki/HOWTO_Create_an_MSYS_Build_Environment.

31.2.2 64 Bit executables with MINGW-w64

Procedure:

Install MSYS, plus bison, flex, auto tools, perl, libiconv, libintl

Install MINGW-w64, activate OpenMP support

See either http://mingw-w64.sourceforge.net/ or http://tdm-gcc.tdragon.net/

(allows to generate both 32 or 64 bit executables by setting flag -m32 or -m64)

Set path to compiler in msys/xx/etc/fstab (e.g. c:/MinGW64 /mingw)

Start compiling with

'./compile_min.sh' or './compile_min.sh 64'

Options used in the script:

–adms and –enable-adms ADMS is an experimental model compiler that translates Verilog-A compact models into C code that can be compiled into ngspice. This is still experimental, but working with some limitations to the models (e.g. no noise models). If you want to use it, please refer to the ADMS section on ngspice web site .

CIDER, XSPICE, and OpenMP may be selected at will.

–disable-debug will give O2 optimization (versus O0 for debug) and removes all debugging info.

The install script will copy all files to C:\Spice or C:\Spice64, the code models for XSPICE will be stored in C:\Spice\lib\spice or C:\Spice64\lib\spice respectively.

A word of caution: Be aware that there might be some bugs in your 64 bit code. We still have some compiler warnings about integer incompatibility (e.g. integer versus size_t etc.)! We will take care of that for the next release.

31.2.3 make ngspice with MS Visual Studio 2008

ngspice may be compiled with MS Visual Studio 2008. Support for MS Visual Studio 2010 is not yet available.

CIDER and XSPICE are included, but the code models for XSPICE (*.cm) are not (yet) made. You may however use the code models (which in fact are dlls) created with MINGW, as e.g. found in the ngspice binary distribution. There is currently no installation procedure provided, you may however install the executable manually as described in the installation tree below. The directory (visualc) with its files vngspice.sln (project starter) and vngspice.vcproj (project contents) allows to compile and link ngspice with MS Visual Studio 2008. The project is probably not compatible with Visual Studio 2005 and not yet with 2010.

/visualc/include contains a dedicated config.h file. It contains the preprocessor definitions required to properly compile the code. strings.h has been necessary during setting up the project.

Install Microsoft Visual Studio 2008 C++ . The MS VS 2008 C++ Express Edition (which is available at no cost from http://www.microsoft.com/express/product/default.aspx) is adequate, if you do not wish to have OpenMP or 64 bit support. So the express edition will allow a 32 bit Release and a Debug version of ngspice, using the Win32 flag. In addition you may select

a console version without graphics interface. The professional edition will offer Release and Debug and Console also for 64 bit (flag x64), as well as an OpenMP variant for 32 or 64 bit.

Procedure:

Goto /ng-spice-rework/visualc.

Start MS Visual Studio 2008 by double click onto vngspice.sln. After MS Visual Studio has opened up, select debug or release version by checking 'Erstellen' , 'Konfigurations-Manager' 'Debug' or 'Release'. Start making ngspice (called vngspice.exe) by selecting 'Erstellen' and 'vngspice neu erstellen'. Object files will be created and stored in visualc/debug or visualc/release. The executable will be stored to visualc/debug/bin or visualc/release/bin.

An installation tree (as provided with MINGW make install) and also used by vngspice in its current distribution is shown in the following table (maybe created manually):

If you intend to install vngspice into another directory, e.g. D:\MySpice, you have to edit /visualc/include/config.h and alter the following entries from:

```
#define NGSPICEBINDIR "C:/Spice/bin"
```

```
#define NGSPICEDATADIR "C:/Spice/share/ng-spice-rework"
```

to

```
#define NGSPICEBINDIR "D:/MySpice/bin"
```

```
#define NGSPICEDATADIR "D:/MySpice/share/ng-spice-rework"
```

nghelp.exe is deprecated and no longer offered, but still available in the binary distribution. If the code model files *.cm are not available, you will get warning messages, but you may use ngspice in the normal way (of course without XSPICE extensions). **To-Do**: Some commands in how-to-ngspice-vstudio.txt and mentioned above have to be translated to English.

31.2.4 make ngspice with pure CYGWIN

If you don't have libdl.a you may need to link libcygwin.a to libdl.a symbolically.

for example:

```
$ cd /lib $ ln -s libcygwin.a libdl.a.
```

The procedure of compiling is the same as with Linux (see chapt. 31.1).

31.2.5 make ngspice with CYGWIN and external MINGW32

The next two compilation options are deprecated and not tested.

according to http://www.geocrawler.com/lists/3/SourceForge/6013/0/7321042/

```
$ cd ng-spice-rework
```

```
$ export PATH="/cygdrive/g/gcc_mingw/bin:$PATH"
```

```
$ autoconf
```

```
$ rm config.cache
```

```
C:\Spice\
    bin\
        ngspice.exe
        nghelp.exe
        ngmakeidx.exe
        ngnutmeg.exe
        cmpp.exe
    lib\
        spice\
            analog.cm
            digital.cm
            spice2poly.cm
            extradev.cm
            extravt.cm
    share\
        info\
            dir
            ngspice.info
            ngspice.info-1
            ..
            ngspice.info-10
        man\
            man1\
                ngmultidec.1
                ngnutmeg.1
                ngsconvert.1
                ngspice.1
        ng-spice-rework\
            helpdir\
                ngspice.idx
                ngspice.txt
            scripts\
                ciderinit
                devaxis
                devload
                setplot
                spectrum
                spinit
```

Table 31.1: ngspice standard installation tree under MS Windows

```
$ ./configure --with-windows --prefix="/cygdrive/g/gcc_mingw/bin"

$ make clean

$ make 2> make.err

$ cp config.h config_ming.h
```

ngspice.exe is o.k.,but make tests does not work (cannot direct console output into file). Needs to add .save "what" "where.test" to every input (*.cir) file. Also all given output files have to be adapted to WINDOWS (CR/LF instead of only LF at each line ending) for allowing proper comparison.

31.2.6 make ngspice with CYGWIN and internal MINGW32 (use config.h made above)

```
$ cd ng-spice-rework

$ rm config.cache

$ export CFLAGS="-mno-cygwin -g -O2"

$ export LDFLAGS="-L/lib/mingw"

$ export CPPFLAGS="-I/usr/include/mingw"

$ ./configure --with-windows

$ cp config_ming.h config.h

$ make clean

$ make 2> make.err
```

`./configure` does not work correctly: It finds headers and libs which are not really available in the -mno-cygwin port of MINGW32. Therefore config.h is not o.k.

To-Do: find appropriate presets for variables ? rewrite tests for headers and libs (search exclusively in mingw directories)

31.2.7 ngspice mingw or cygwin console executable

If you omit the configure flag “–with-windows”, you will obtain a console application.

```
./configure --enable-xspice --enable-cider --enable-openmp
 --disable-debug CFLAGS=-m32 LDFLAGS=-m32 prefix=C:/Spice
```

is an example for TDM mingw, 32 Bit ngspice console.

31.3 Reporting errors

Setting up ngspice is a complex task. The source code contains over 1500 files. ngspice should run on various operating systems. Therefore errors may be found, some still evolving from the original spice3f5 code, others introduced during the ongoing code enhancements.

If you happen to experience an error during compilation of ngspice, please send a report to the development team. Ngspice is hosted on sourceforge, the preferred place to post a bug report is the ngspice bug tracker. We would prefer to have your bug tested against the actual source code available at CVS, but of course a report using the most recent ngspice release is welcome! Please provide the following information with your report:

Ngspice version

Operating system

Small input file to reproduce the bug (if to report a runtime error)

Actual output versus the expected output

Chapter 32

Copyrights and licenses

32.1 Documentation license

32.1.1 Spice documentation copyright

Copyright 1996 The Regents of the University of California.

Permission to use, copy, modify, and distribute this software and its documentation for educational, research and non-profit purposes, without fee, and without a written agreement is hereby granted, provided that the above copyright notice, this paragraph and the following three paragraphs appear in all copies. This software program and documentation are copyrighted by The Regents of the University of California. The software program and documentation are supplied "as is", without any accompanying services from The Regents. The Regents does not warrant that the operation of the program will be uninterrupted or error-free. The end-user understands that the program was developed for research purposes and is advised not to rely exclusively on the program for any reason.

IN NO EVENT SHALL THE UNIVERSITY OF CALIFORNIA BE LIABLE TO ANY PARTY FOR DIRECT, INDIRECT, SPECIAL, INCIDENTAL, OR CONSEQUENTIAL DAMAGES, INCLUDING LOST PROFITS, ARISING OUT OF THE USE OF THIS SOFTWARE AND ITS DOCUMENTATION, EVEN IF THE UNIVERSITY OF CALIFORNIA HAS BEEN ADVISED OF THE POSSIBILITY OF SUCH DAMAGE. THE UNIVERSITY OF CALIFORNIA SPECIFICALLY DISCLAIMS ANY WARRANTIES, INCLUDING, BUT NOT LIMITED TO, THE IMPLIED WARRANTIES OF MERCHANTABILITY AND FITNESS FOR A PARTICULAR PURPOSE. THE SOFTWARE PROVIDED HEREUNDER IS ON AN "AS IS" BASIS, AND THE UNIVERSITY OF CALIFORNIA HAS NO OBLIGATIONS TO PROVIDE MAINTENANCE, SUPPORT, UPDATES, ENHANCEMENTS, OR MODIFICATIONS.

32.1.2 XSPICE SOFTWARE copyright

Code added to SPICE3 to create the XSPICE Simulator and the XSPICE Code Model Subsystem was developed at the Computer Science and Information Technology Laboratory, Georgia Tech Research Institute, Atlanta GA, and is covered by license agreement the following copyright:

Copyright © 1992 Georgia Tech Research Corporation All Rights Reserved. This material may be reproduced by or for the U.S. Government pursuant to the copyright license under the clause at DFARS 252.227-7013 (Oct. 1988)

Refer to U.C. Berkeley and Georgia Tech license agreements for additional information.

32.1.3 CIDER RESEARCH SOFTWARE AGREEMENT (superseded by 32.2.1)

This chapter specifies the terms under which the CIDER software and documentation coming with the original distribution are provided. This agreement is superseded by 32.2.1, the "modified" BSD licence.

Software is distributed as is, completely without warranty or service support. The University of California and its employees are not liable for the condition or performance of the software.

The University does not warrant that it owns the copyright or other proprietary rights to all software and documentation provided under this agreement, notwithstanding any copyright notice, and shall not be liable for any infringement of copyright or proprietary rights brought by third parties against the recipient of the software and documentation provided under this agreement.

THE UNIVERSITY OF CALIFORNIA HEREBY DISCLAIMS ALL IMPLIED WARRANTIES, INCLUDING THE IMPLIED WARRANTIES OF MERCHANTABILITY AND FITNESS FOR A PARTICULAR PURPOSE. THE UNIVERSITY IS NOT LIABLE FOR ANY DAMAGES INCURRED BY THE RECIPIENT IN USE OF THE SOFTWARE AND DOCUMENTATION, INCLUDING DIRECT, INDIRECT, SPECIAL, INCIDENTAL, OR CONSEQUENTIAL DAMAGES.

The University of California grants the recipient the right to modify, copy, and redistribute the software and documentation, both within the recipient's organization and externally, subject to the following restrictions:

(a) The recipient agrees not to charge for the University of California code itself. The recipient may, however, charge for additions, extensions, or support.

(b) In any product based on the software, the recipient agrees to acknowledge the research group that developed the software. This acknowledgment shall appear in the product documentation.

(c) The recipient agrees to obey all U.S. Government restrictions governing redistribution or export of the software and documentation.

All BSD licenses have been changed to the "modified" BSD license by UCB in 1999 (see chapt. 32.2.1).

32.2 ngspice license

The SPICE license is the **"Modified" BSD license**, (see http://embedded.eecs.berkeley.edu/pubs/downloads/sp
ngspice adopts this "Modified" BSD license as well for all of its source code (except of tclspice, which is under LGPLv2)!

****

Copyright (c) 1985-1991 The Regents of the University of California.

All rights reserved.

Permission is hereby granted, without written agreement and without license or royalty fees, to use, copy, modify, and distribute this software and its documentation for any purpose, provided that the above copyright notice and the following two paragraphs appear in all copies of this software.

IN NO EVENT SHALL THE UNIVERSITY OF CALIFORNIA BE LIABLE TO ANY PARTY FOR DIRECT, INDIRECT, SPECIAL, INCIDENTAL, OR CONSEQUENTIAL DAMAGES ARISING OUT OF THE USE OF THIS SOFTWARE AND ITS DOCUMENTATION, EVEN IF THE UNIVERSITY OF CALIFORNIA HAS BEEN ADVISED OF THE POSSIBILITY OF SUCH DAMAGE. THE UNIVERSITY OF CALIFORNIA SPECIFICALLY DISCLAIMS ANY WARRANTIES, INCLUDING, BUT NOT LIMITED TO, THE IMPLIED WARRANTIES OF MERCHANTABILITY AND FITNESS FOR A PARTICULAR PURPOSE. THE SOFTWARE PROVIDED HEREUNDER IS ON AN "AS IS" BASIS, AND THE UNIVERSITY OF CALIFORNIA HAS NO OBLIGATION TO PROVIDE MAINTENANCE, SUPPORT, UPDATES, ENHANCEMENTS, OR MODIFICATIONS.

****

32.2.1 “Modified” BSD license

All “old” BSD licenses (of SPICE or CIDER) have been changed to the “modified” BSD license according to the following publication (see ftp://ftp.cs.berkeley.edu/pub/4bsd/README.Impt.License.Change)

July 22, 1999

To All Licensees, Distributors of Any Version of BSD:

As you know, certain of the Berkeley Software Distribution ("BSD") source code files require that further distributions of products containing all or portions of the software, acknowledge within their advertising materials that such products contain software developed by UC Berkeley and its contributors.

Specifically, the provision reads:

" 3. All advertising materials mentioning features or use of this software must display the following acknowledgment: This product includes software developed by the University of California, Berkeley and its contributors."

Effective immediately, licensees and distributors are no longer required to include the acknowledgment within advertising materials. Accordingly, the foregoing paragraph of those BSD Unix files containing it is hereby deleted in its entirety.

William Hoskins

Director, Office of Technology Licensing

University of California, Berkeley

32.2.2 Linking to GPLd libraries (e.g. readline):

The readline manual at http://tiswww.case.edu/php/chet/readline/rltop.html states: Readline is free software, distributed under the terms of the GNU General Public License, version 3. This

means that if you want to use Readline in a program that you release or distribute to anyone, the program must be free software and have a GPL-compatible license.

According to http://www.gnu.org/licenses/license-list.html, the **modified BSD license**, thus also the ngspice license, belong to the family of **GPL-Compatible Free Software Licenses**. Therefore the linking restrictions to readline, which have existed with the old BSD license, are no longer in effect.